NEW INTEGRAL WHEELS INCLUDED

DUALVEE
Motion Technology®

COMPONENTS
TECHNICAL SPECIFICATIONS

BISHOPWISECARVER®

DualVee Motion Technology®

Bishop-Wisecarver is recognized as the market leader for guide wheel technology. In 1967, Bud Wisecarver patented DualVee Motion Technology® (DMT). Three main components define DMT: the DualVee® guide wheel, its mating Vee profile track with patented mounting shoulder and support bushings. DualVee Motion Technology® is one of the most popular guided motion products due to its self-cleaning action and self-aligning track (mounting shoulder) resulting in an overall lower installation cost. The PTDA Power Transmission Handbook recognizes DualVee Motion Technology® as an industry standard.

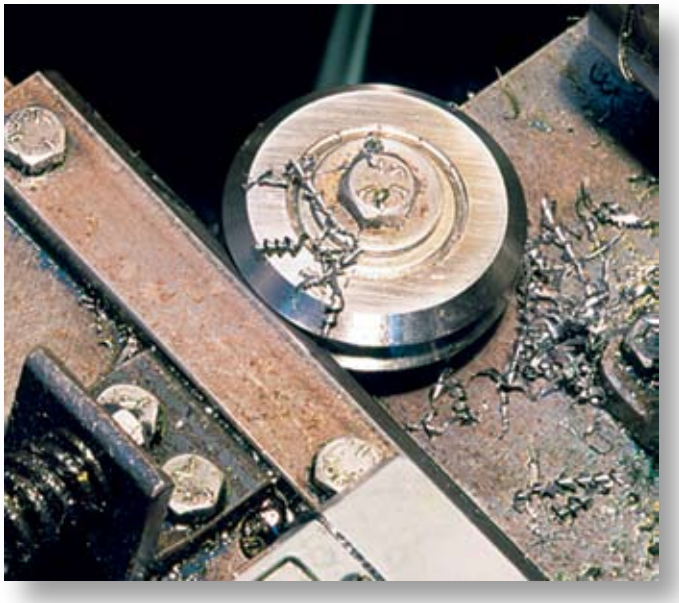

- **Carbon or Stainless Steel Components**
- **Speeds up to 8 meters/sec**
- **Acceleration up to 5 g's**
- **High Accuracy and Repeatability**
- **High Temperature, Clean Room Options**
- **Ground Mounting Surfaces not Required**
- **Low Noise**
- **Smooth Action**
- **Long Lengths**

Designed for Dirty and Severe Environments

The patented 90º DualVee® design creates a velocity gradient, since the circumference of the wheel is greater at the major diameter, resulting in a constant sweeping action cleaning debris from the track.

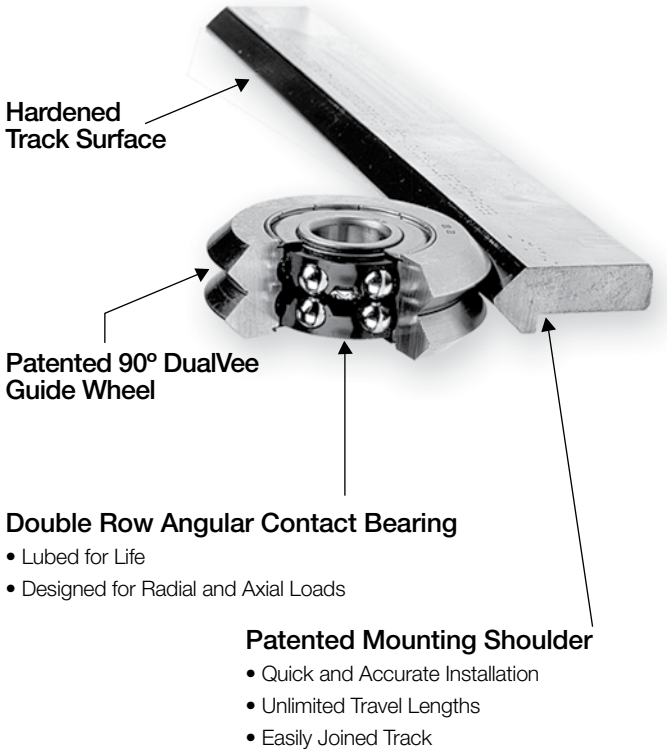

Application and Design Assistance

888.580.8272

3D Modeling and CAD Drawings

www.bwc.com

From factory automation projects to OEM designs, DMT components, assemblies, and guides provide the design flexibility and the desired level of integration for virtually any guided motion application. Based on the DualVee guide wheel, DMT offers a level of reliability unmatched in the industry, especially within the wide range of environments in which it can be employed.

- Dirt
- Dust
- Metal chips
- Wood chips
- Textile fiber
- Slurry
- Deionized water
- Vacuum
- Clean room
- High temperature

Typical Mountings

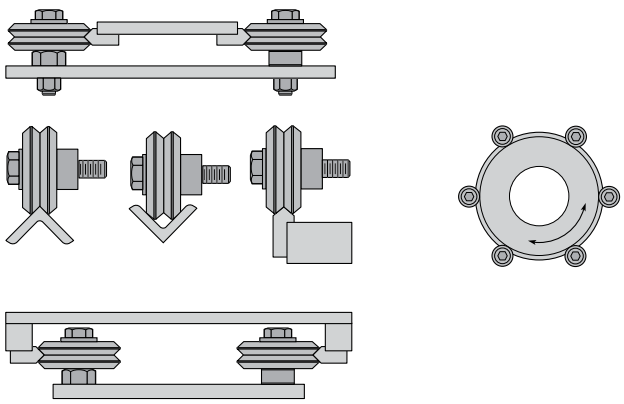

Product Overview 2-3

Components 4-21

Guide Wheel Overview. 4-5
Guide Wheels. 6
Guide Wheels Dimensions and Materials 7
Integral Bushing DualVee Wheels 8
Integral Studded DualVee Wheels 9
Studded Guide Wheels Assembly 10
Crown Wheels 11
Bushings and Journals 12
Journal Assemblies. 13
Support Bushings. 14-15
Lubricator Assemblies 16
Wheel Covers. 17
Single Edge Track 18-19
Double Edge Track. 20
Size 0 MinVee Wheel Plates 21

Linear Guides 22-25

QuickTrak Wheel Plates and Track 22
Basic Wheel Plates 23
Wiper Wheel Plates 24
Track Plate Assemblies 25

Technical Reference. 26-33

Mounting Dimensions/Formula 26
Load/Life Relationship 27
Load/Life Equation. 28
Application Notes 29
Lubrication 30
Wheel Carriage Configurations 30
Wheel Preload 31
Wheel Adjustment Wrenches. 32
Studded Wheel Mounting 32
Application Data Sheet 33

© Bishop-Wisecarver Corporation 2006. All rights reserved. www.bwc.com 888.580.8272

PRODUCT OVERVIEW

DualVee® Guide Wheels - pgs 6 - 7

- Double row angular contact bearings offer good load carrying capacity in all orientations
- Sensitive rolling elements are isolated from the environment and protected from contaminants
- Several sizes to accommodate envelope and load carrying requirements

New Integral Bushing or Mounting Stud Guide Wheels - pgs 5, 8 & 9

- One piece construction with inner bearing race
- Reduced tolerance stack up
- Lower profile and increased rigidity
- Larger diameter fasteners, greater torque capability

DualVee® Single Edge Track With Patented Mounting Shoulder - pgs 18 - 19

- Complete mounting versatility
- Mounting against a machined register ensures accurate positioning of rails
- Thin cross section makes track compliant, assuring optimal installed accuracy (straightness and flatness of travel)
- Allows for spacing of track pairs to accommodate heavy roll moments
- 1045 carbon steel and 420 stainless steel from stock
- Induction hardened or “as formed”
- Custom plating options include black oxide, thin dense chrome, electroless nickel, or zinc

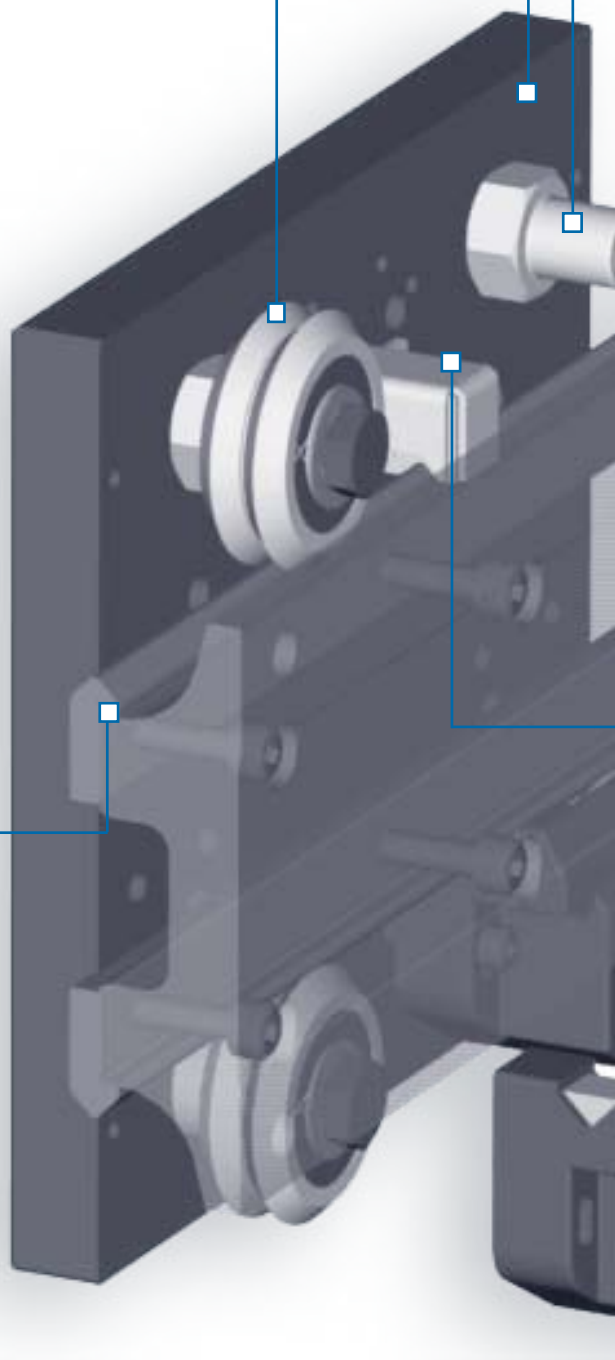

© Bishop-Wisecarver Corporation 2006. All rights reserved www.bwc.com 888.580.8272

DualVee® Wheel Plate Assembly - pgs 23 - 24

- Available preassembled, including four DualVee® guide wheels and mounting hardware, ready for installation

  Optional wheel covers or lubricators maximize service life
- High strength, lightweight anodized aluminum plate can be modified to accommodate design specific requirements
- Two eccentric wheels mounted opposite two concentrics allow for easy fit up adjustment

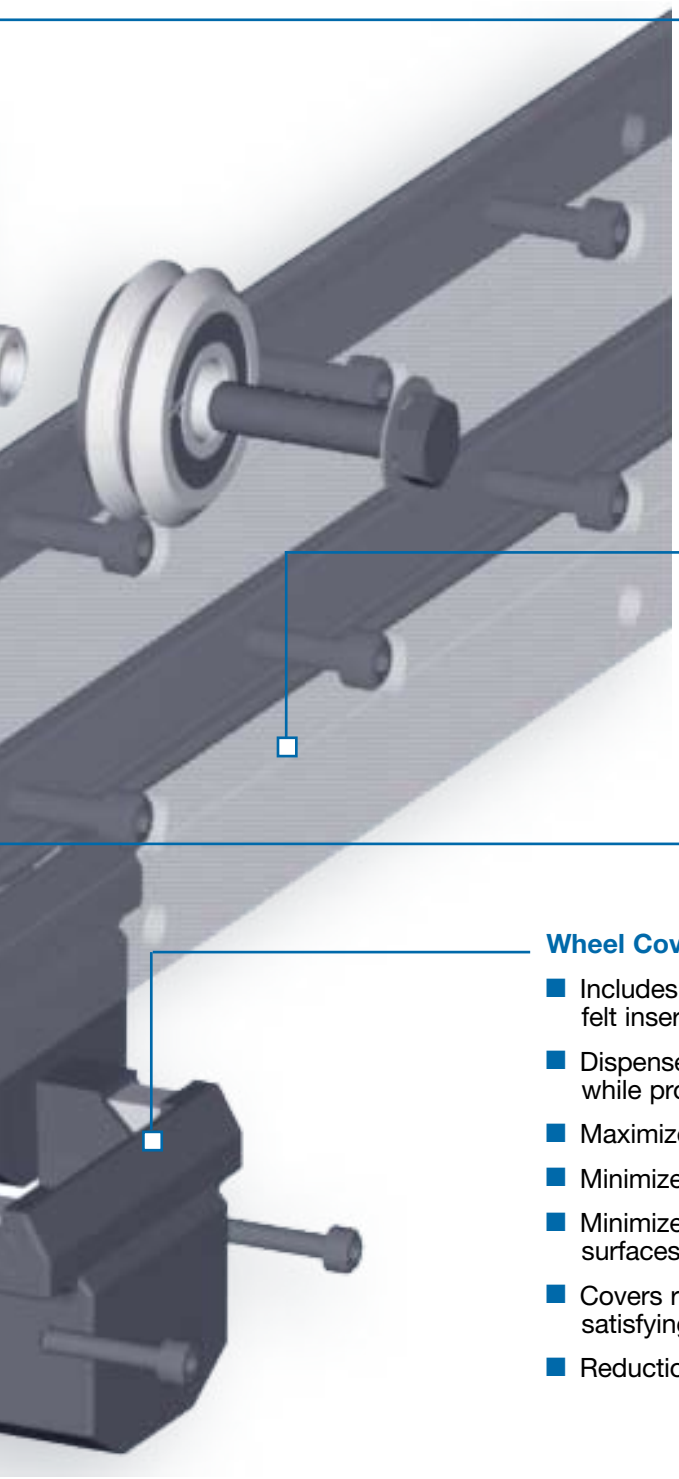

Bushings / Journals / Fasteners - pgs 12 - 15

- Available in eccentric or concentric for system fit up adjustability
- Bushings allow for customer specified fastener of varying material, head style, or length
- Journals incorporate bushing and fastener into a single element, and allow for fit up adjustment to be made from the top side of the carriage plate

Track Plate Assemblies - pg 25

- Aluminum base length is easily modified
- Unlimited mounting options for wheel and track components

Lubricators - pg 16

Wheel Covers - pg 17

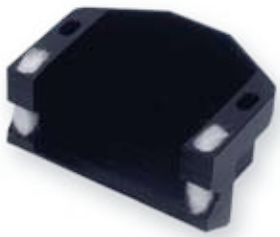

- Includes polymer or stainless steel housing, a vial of oil, felt inserts, and appropriate mounting hardware
- Dispenses a thin film of oil along track Vee way surfaces while protecting wheel track interface from debris
- Maximizes service life, load capacity, and linear velocity
- Minimizes coefficient of friction
- Minimizes corrosion and wear of load bearing contact surfaces
- Covers rolling element contact surface satisfying safety requirements
- Reduction or elimination of possible pinch points

© Bishop-Wisecarver Corporation 2006. All rights reserved.

COMPONENTS

Guide Wheel Overview

- Double row angular contact bearing arrangement
- Six standard sizes
- Stainless or carbon steel configurations available from stock
- Clean room compatible and high temperature configurations available from stock
- Shielded or sealed to protect against contamination
- Inside or outside Vee surface can be employed to support loads

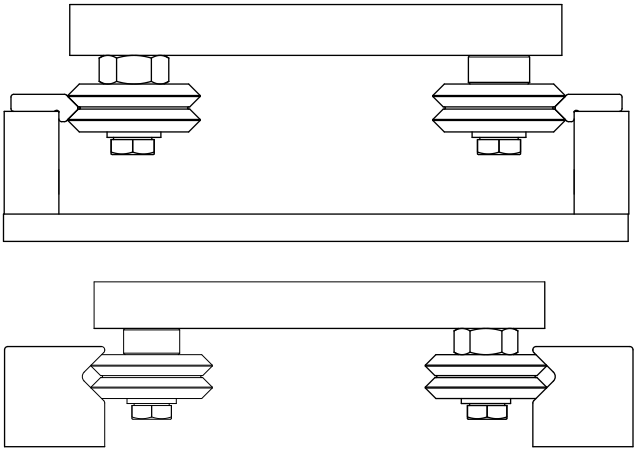

Figure 1 **DualVee® configurations showing use of inside and outside Vee surfaces.** **(Above)**

Figure 2 **DualVee Motion Technology® (left) vs. alternative recirculating bearing technologies (right).**

- Recirculating elements in DualVee® guide wheels are self-contained and isolated from the environment; rolling contact between wheel and track sweeps debris aside making DualVee® ideal for use in contaminated environments.

- Alternative round and square rail linear guides have recirculating elements directly in contact with the rail's bearing surface, making shielding of the ball path region difficult. These alternative bearing technologies often require bellows or other costly methods of protection to prevent the ingression of contaminants which leads to failure.

© Bishop-Wisecarver Corporation 2006. All rights reserved www.bwc.com 888.580.8272

NEW

Innovative Designs, Greater Flexibility

New Integral Bushing and Studded Shaft Guide Wheels (Patent Pending)

DualVee® technology has been improved with new integral bushings and stud shafts. The guide wheels feature a one piece bushing or stud shaft with a machined inner bearing race in lieu of a two piece assembly. The advantages of this new design compared to conventional guide wheels with bushings or journals are:

- Less Tolerance Stack Up
- Lower Profile and Increased Rigidity
  - -Less deflection, up to 84%
- Larger Diameter Fasteners
  - -Up to 25% greater torque capability
- External Adjustment and Tightening
  - -Internal hex key allows quick installation with power tools and easy access for adjustment (size 2, 3, 4: SWI only)
- Lower Procurement and Installation Costs

Model BWI

Model SWI

Mounting Height Comparison for BWI, SWI, and "W" Wheel with a Bushing

The BWI and SWI mounting height profile is between the height of the existing W wheels with a standard bushing and a low profile bushing. See comparison below.

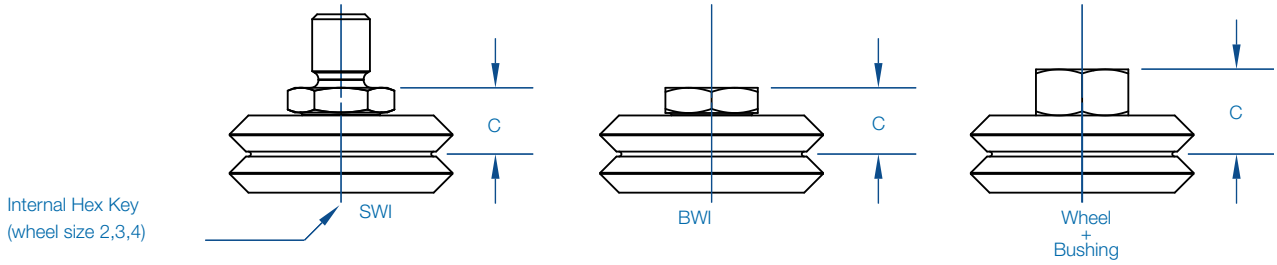

Wheel Size	SWI	BWI	"W" Wheel + Standard Bushing	"W" Wheel + Low Profile Bushing
	"C"	"C"	"C"	"C"
0	6.15	NA	NA	NA
1	7.3	NA	10.16	6.05
2	9.63	9.63	12.22	7.06
3	13.63	13.63	17.41	11.42
4	16.36	16.36	20.63	12.62

Dimensions in mm
NA = Not Applicable

Note: BWI and SWI are not dimensionally interchangeable with the current DualVee wheels with bushings, journals or the "SWA" studded guide wheel assemblies.

BWI and SWI to "W" Fastener Size Comparison

- BWI & SWI feature increased mounting torque capability due to larger diameter fasteners

Wheel Size	SWI Concentric	SWI Eccentric	BWI Concentric	BWI Eccentric	"W" Wheel + Concentric Bushing	"W" Wheel + Eccentric Bushing
0	M6	M5	NA	NA	NA	NA
1	M8	M6	NA	NA	M4	M4
2	M10	M8	M8	M8	M6	M6
3	M12	M10	M10	M10	M8	M8
4	M14	M12	M12	M12	M10	M10

© Bishop-Wisecarver Corporation 2006. All rights reserved. www.bwc.com 888.580.8272

Guide Wheels

DualVee Wheels, Steel and Stainless Steel (SS)

Part Number	Radial Load (N)	Radial Load (lbf)	Axial Load (N)	Axial Load (lbf)	Weight in Grams
W0	650	146	123	28	5.1
W1	1220	274	252	57	11.1
W2	2650	596	625	141	39.0
W3	5900	1326	1701	382	130.2
W4	9700	2181	4001	900	276.0
W0X	650	146	123	28	5.1
W1X	1220	274	252	57	11.1
W2X	2650	596	625	141	39.0
W3X	5900	1326	1701	382	132.0
W4X	9700	2181	4001	900	276.0
W4XXL	14300	3215	6552	1473	575.0
W1SSX	1220	274	252	57	11.1
W2SSX	2650	596	625	141	39.0
W3SSX	5900	1326	1701	382	130.2
W4SSX	9700	2181	4001	900	276.0
W4SSXXL	14300	3215	6552	1473	575.0
W0SS227	540	121	102	23	5.1
W1SS227	1013	228	209	47	11.1
W2SS227	2200	494	519	117	39.0
W3SS227	4897	1101	1412	317	130.2
W4SS227	8051	1810	3321	747	276.0

DualVee Integral Wheels, Steel and Stainless Steel

Part Number	Radial Load (N)	Radial Load (lbf)	Axial Load (N)	Axial Load (lbf)	Weight in Grams C	Weight in Grams E
BWIC2M/BWIE2M	2650	596	625	141	45.0	45.0
BWIC3M/BWIE3M	5900	1326	1701	382	156.4	156.4
BWIC4M/BWIE4M	9700	2181	4001	900	302.0	302.0
SWIC0/SWIE0	650	146	123	28	9.1	8.8
SWIC1/SWIE1	1220	274	252	57	17.5	16.5
SWIC2/SWIE2	2650	596	625	141	54.3	53.5
SWIC3/SWIE3	5900	1326	1701	382	164.0	161.3
SWIC4/SWIE4	9700	2181	4001	900	330.4	327.4

DualVee Polymer Studded Wheels

Part Number	Radial Load (N)	Radial Load (lbf)	Axial Load (N)	Axial Load (lbf)	Weight in Grams C	Weight in Grams E
SWIC0P/SWIE0P	28	6	12	3	5.9	5.7
SWIC1P/SWIE1P	55	12	27.5	6	10.7	9.9
SWIC2P/SWIE2P	70	16	42	9	26.2	24.9

Crown Wheels, Steel and Polymer

Part Number	Radial Load (N)	Radial Load (lbf)	Axial Load (N)	Axial Load (lbf)	Weight in Grams C	Weight in Grams E
CSWIC1/CSWIE1	1220	274	0	0	25.0	25.0
CSWIC2/CSWIE2	2650	596	0	0	65.0	65.0
CSWIC3/CSWIE3	5900	1326	0	0	190.0	190.0
CSWIC0P/CSWIE0P	28	6	0	0	6.2	6.0
CSWIC1P/CSWIE1P	55	12	0	0	11.2	10.2
CSWIC2P/CSWIE2P	70	16	0	0	27.5	26.2

Notes

1. See page 27 for further discussion on load/life relationship.
2. Also available in non-heat stabilized.

© Bishop-Wisecarver Corporation 2006. All rights reserved www.bwc.com 888.580.8272

Guide Wheel Dimensions and Materials (Steel and Stainless Steel)

Model Code Examples:

W1 (DualVee Guide Wheel, Size 1, Standard Materials)

W1SSX (DualVee Guide Wheel, Size 1, Stainless Steel, Seal)

W1SS227 (DualVee Guide Wheel, Size 1, Stainless Steel, High Heat + Clean Room)

W	(Size)	(Materials)					
Wheel DualVee	**Wheel Size**	**Materials**	**Outer Race**	**Inner Race**	**Ball**	**Retainer**	**Shield or Seal**
W	**0** = .584" dia.	**Blank (Std.) =**	52100	52100	52100	Nylon 66	Shield
		X =	52100	52100	52100	Nylon 66	Seal
		SS227[6] =	440C	440C	440C	304	Seal
			Heat Stabilized for Clean Room and High Heat Compatible[5]				
	1 = .771" dia. **2** = 1.210" dia.	**Blank (Std.) =**	52100	52100	52100	Nylon 66	Shield
		X =	52100	52100	52100	Nylon 66	Seal
		SSX =	440C	440C	440C	Nylon 66	Seal
		SS227[6] =	440C	440C	440C	304	Shield
			Heat Stabilized for Clean Room and High Heat Compatible[5]				
	3 = 1.803" dia.	**Blank (Std.) =**	52100	52100	52100	Nylon 66	Shield
		X =	52100	52100	52100	Nylon 66	Seal
		SSX =	440C	440C	440C	Nylon 66	Seal
		SS227[6] =	440C	440C	440C	304	Shield
			Heat Stabilized for Clean Room and High Heat Compatible[5]				
	4 = 2.360" dia.	**Blank (Std.) =**	52100	52100	52100	Nylon 66	Shield
		X =	52100	52100	52100	Nylon 66	Seal
		SSX =	440C	440C	440C	Nylon 66	Seal
		SS227[6] =	440C	440C	440C	304	Seal
			Heat Stabilized for Clean Room and High Heat Compatible[5]				
	4 = 2.968" dia. Extra Large Wheel	**XXL =**	52100	52100	52100	Nylon 66	Seal
		SSXXL =	440C	440C	440C	Nylon 66	Seal

Size	Outside Diameter A	Bore Size B[1,2]	Width W[3]	Inside Vee Radius MDW Inside	Outside Vee Radius MDW Outside
0	.584	.1575	.250	.234	.359
1	.771	.1875	.310	.313	.468
2	1.210	.3750	.438	.500	.719
3	1.803	.4724	.625	.750	1.063
4	2.360	.5906	.750	1.000	1.375
4XL	2.968	.8661	1.000	1.250	1.750

*All dimensions are in inches unless otherwise stated **Guide wheels are manufactured to ABEC 1.

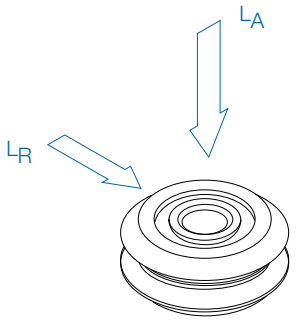

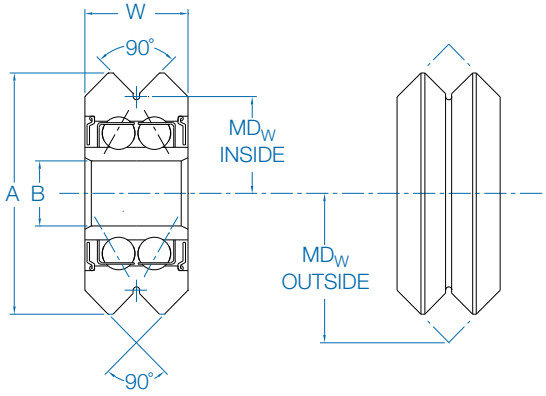

Notes

1. Bore ID tolerance is + .0000, -.0003 inch, except 4XL.
2. 4XL Bore ID tolerance is +.0000, -.0004 inch.
3. Width tolerance is + .0000, -.0047 inch.
4. Clean Room Compatible - All stainless steel components are internally lubricated with Krytox GPL 227.
5. High Temperature Compatible - Heat stabilized components allow for operating temperatures to 500° F or 260° C.
6. Also available in non-heat stabilized.

© Bishop-Wisecarver Corporation 2006. All rights reserved. www.bwc.com 888.580.8272

Integral Bushing DualVee Wheels

Model Code Examples:

BWIC2M (Bushing DualVee Wheel Integral, Concentric, Size 2, Std. Materials)

BWIE2M (Bushing DualVee Wheel Integral, Eccentric, Size 2, Std. Materials)

BWI **(Wheel Offset)** **(Wheel Size)** **(Materials)**

Bushing Wheel Integral	Wheel Offset	Wheel Size	Materials Code	Outer Race	Inner Race	Ball	Retainer	Shield or Seal
BWI	**C** = Concentric **E** = Eccentric	**2** = 1.210" dia. **3** = 1.803" dia. **4** = 2.360" dia.	**M =**	52100	52100	52100	Nylon 66	Shield
			XM =	52100	52100	52100	Nylon 66	Seal
			SSXM[1] =	440C	440C	440C	Nylon 66	Seal

Size	A	B	C	D	E	F
2	14	8	9.63	15.19	0.76	30.73
3	19	10	13.63	21.56	1.50	45.80
4	22	12	16.36	25.88	2.01	59.94

*Values are in millimeters

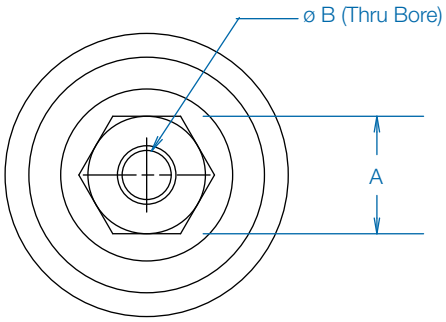

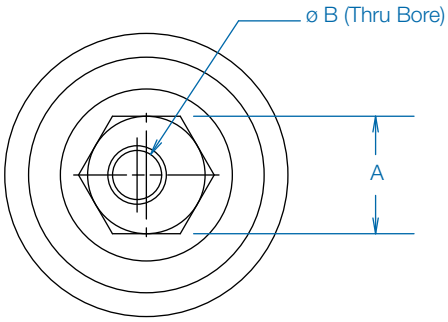

Concentric Bushing

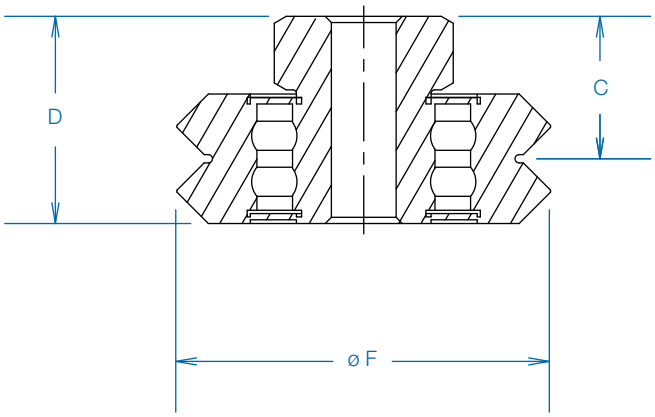

Eccentric Bushing

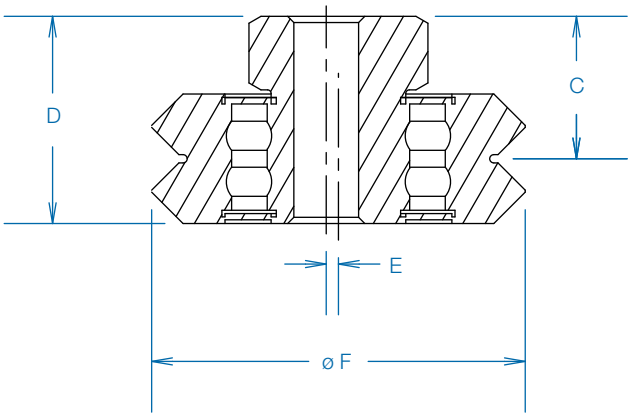

Notes

1. Please contact Bishop-Wisecarver for pricing and delivery.

© Bishop-Wisecarver Corporation 2006. All rights reserved www.bwc.com 888.580.8272

Integral Studded DualVee Wheels

Model Code Examples:

SWIC1 (Studded DualVee Wheel Integral, Concentric Size 1, Std. Materials)

SWIE1P (Studded DualVee Wheel Integral, Eccentric size 1, Polymer)

SWI **(Wheel Offset)** **(Wheel Size)** **(Materials)**

Studded Wheel	Wheel Offset	Wheel Size	Materials Code	Materials				
				Outer Race	Inner Race	Ball	Retainer	Shield or Seal
SWI	**C** = Concentric **E** = Eccentric	**0** = .584" dia. **1** = .771" dia. **2** = 1.210" dia.	**Blank (Std.) =**	52100	52100	52100	Nylon 66	Shield
			X =	52100	52100	52100	Nylon 66	Seal
			SSX[5] =	440C	440C	440C	Nylon 66	Seal
			P =	Polymer Overmoulded 440C	440C	440C	Stainless Steel 300 Series	Shield
		3 = 1.803" dia. **4** = 2.360" dia.	**Blank (Std.) =**	52100	52100	52100	Nylon 66	Shield
			X =	52100	52100	52100	Nylon 66	Seal
			SSX[5] =	440C	440C	440C	Nylon 66	Seal
				Consult factory for price and availability				

*Values are in inches

Integrated Studded Steel Wheels

Size	A	B[1]	C[2]	D[3]	E	F[4]	G	Concentric Stud Thread	Eccentric Stud Thread	H	Internal Hex (steel version only)	I (max)
0	11	5.56	2.16	7.62	16.95	6.15	0.46	M6 x 1.0	M5 x 0.8	14.83	-	0.43
1	12	6.30	2.16	8.10	19.33	7.30	0.61	M8 x 1.25	M6 x 1.0	19.58	-	0.5
2	14	9.53	2.79	11.38	26.57	9.63	0.76	M10 x 1.5	M8 x 1.25	30.73	6	-
3	19	10.72	4.32	15.11	36.68	13.63	1.50	M12 x 1.75	M10 x 1.5	45.80	8	-
4	22	12.70	4.50	19.00	44.89	16.36	2.01	M14 x 2.0	M12 x 1.75	59.94	10	-

*Values are in millimeters

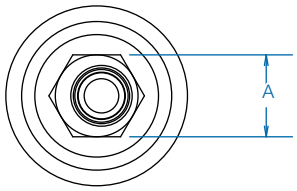

Concentric Stud

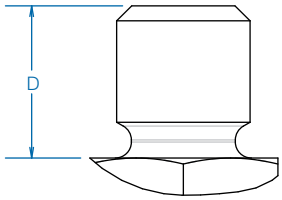

Eccentric Stud

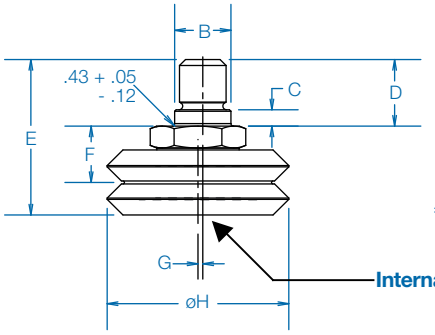

Bottom Geometry size 0 & size 1

I (swage height)

Internal Hex Key size 2, 3 & 4

Integrated Studded Polymer Wheels

Size	A	B[1]	C[2]	D[3]	E	F[4]	G	Concentric Stud Thread	Eccentric Stud Thread	H
0	11	5.56	2.16	7.62	16.95	6.15	0.81	M6 x 1.0	M5 x 0.8	14.83
1	12	6.30	2.16	8.10	19.33	7.30	0.84	M8 x 1.25	M6 x 1.0	19.58
2	14	9.53	2.79	11.38	26.57	9.63	0.97	M10 x 1.5	M8 x 1.25	30.73

*Values are in millimeters

Concentric Stud

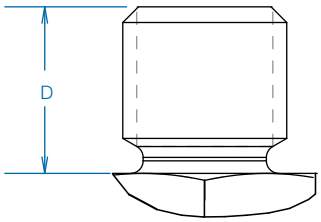

Eccentric Stud

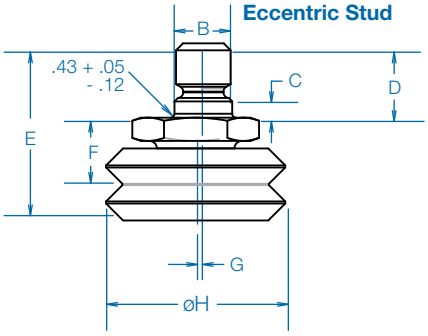

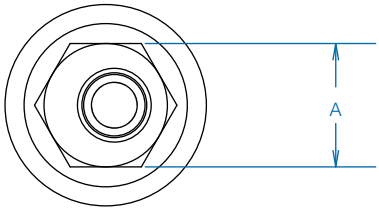

Notes

1. Diameter Tolerance is +0.05/-0.00 2. Height Tolerance is +/-0.13 3. Height Tolerance is +/-0.1 4. Height Tolerance is +/-0.05 5. Please call for pricing and delivery.

© Bishop-Wisecarver Corporation 2006. All rights reserved. www.bwc.com 888.580.8272

Studded Guide Wheels Assembly

Model Code Examples: **SWAE0SS227** (Studded DualVee Wheel, Eccentric Size 0, Stainless Steel, Clean Room)
SWAC1SSX (Studded DualVee Wheel, Concentric Size 1, Stainless Steel)

SWA **(Wheel Offset)** **(Wheel Size)** **(Materials)**

Studded Wheel Assembly	Wheel Offset	Wheel Size	Materials Code	Materials				
				Outer Race	Inner Race	Ball	Retainer	Shield or Seal
SWA	**C** = Concentric **E** = Eccentric	**0** = .584" dia.	**SS227** =	440C	440C	440C	304	Seal
				Clean Room Compatible				
	C = Concentric **E** = Eccentric	**1** = .771" dia. **2** = 1.210" dia.	**SSX** =	440C	440C	440C	Nylon 66	Seal
			SS227 =	440C	440C	440C	304	Shield
				Heat Stabilized for Clean Room and High Heat Compatible[1]				

*Values are in inches

Size	Offset EC[5]	Overall Length H	Journal Diameter OD[2]	Journal Length JL	Thread Length TL	Thread T	Shoulder Thickness S[3]	Vee Height VH[4]	Hex Size HS	Nut & Washer N, W[6,7]	Weight in Grams
0	.012 (.3mm)	.74 (18.8mm)	.1566 (3.98mm)	.39 (9.9mm)	.24 (6.1mm)	M4 x 0.7	.080 (2.0mm)	.205 (5.2mm)	11 mm	M4	8.9
1	.015 (.4mm)	1.00 (25.4mm)	.2352 (5.97mm)	.59 (15.0mm)	.35 (8.9mm)	M6 x 1	.083 (2.1mm)	.238 (6.0mm)	12 mm	M6	19.8
2	.024 (.6mm)	1.54 (39.1mm)	.3926 (9.97mm)	.98 (24.9mm)	.59 (15.0mm)	M10 x 1.5	.104 (2.6mm)	.323 (8.2mm)	14 mm	M10	74.2

*Values are in inches (millimeters)

Thru-Hole Style

- DualVee® guide wheels with 416 stainless steel stud and mounting hardware
- Easy installation/available from stock

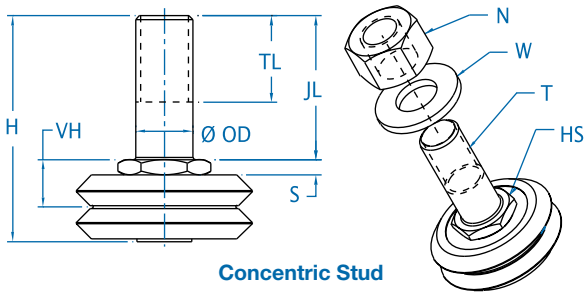

Concentric Stud

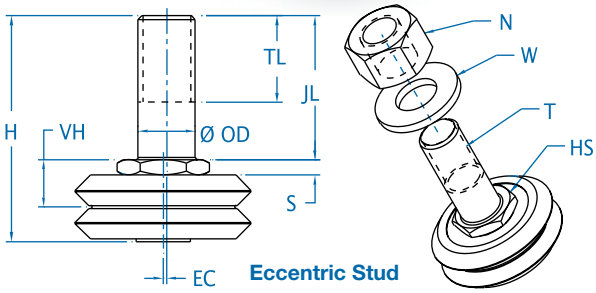

Eccentric Stud

Notes

1. High Temperature compatible. Heat stabilized components allow for operating temperatures to 500° for 260° C.
2. Journal Diameter (OD) Tolerance is +0.0000, -0.0007 (+0.00 mm, -0.02 mm).
3. Shoulder Thickness (S) Tolerance is ±0.001 (±0.03 mm).
4. Vee Height (VH) Tolerance is ±0.002 (±0.05 mm).
5. Eccentricity (EC) Tolerance is ±0.005 (±0.13 mm). All mounting information in this catalog assumes a central position of the eccentric stud allowing adjustment from plus "EC" to minus "EC".
6. Nuts are manufactured to DIN standard 934 (18-8 stainless steel).
7. Washers are manufactured to DIN standard 125 (18-8 stainless steel).
8. See guide wheel specifications for detailed data on wheels.
9. See load/life discussion in the technical reference section for sizing and selection information (page 27).

© Bishop-Wisecarver Corporation 2006. All rights reserved www.bwc.com 888.580.8272

MadeWell™ Crown Integral Studded Wheels, Steel and Polymer

Model Code Examples:

CSWIC1 (Crown Wheel, Stud Integral, Concentric, Size 1, Std. Materials)

CSWIE2P (Crown Wheel, Stud Integral, Eccentric, Size 2, Polymer)

CSWI **(Wheel Offset)** **(Wheel Size)** **(Materials)**

Studded Wheel Integral	Wheel Offset	Wheel Size	Materials Code	Outer Race	Inner Race	Ball	Retainer	Shield or Seal
CSWI	**C** = Concentric **E** = Eccentric	**0** = 0.584" dia. **1** = 0.771" dia. **2** = 1.210" dia.	**Blank (Std.)** =	52100	52100	52100	Nylon 66	Shield
			X =	52100	52100	52100	Nylon 66	Seal
			P =	Polymer Overmoulded 440C	440C	440C	Stainless Steel 300 Series	Shield
		3 = 1.803" dia.	**Blank (Std.) =**	52100	52100	52100	Nylon 66	Shield

Crown Integral Studded Wheels, Steel

Size	A	B[1]	C[2]	D[3]	E	F[4]	G	Concentric Stud Thread	Eccentric Stud Thread	H	Internal Hex (steel version only)	I (max)
1	12	6.30	2.16	8.10	19.33	7.30	0.61	M8 x 1.25	M6 x 1.0	19.58	-	0.5
2	14	9.53	2.79	11.38	26.57	9.63	0.76	M10 x 1.5	M8 x 1.25	30.73	6	-
3	19	10.72	4.32	15.11	36.68	13.63	1.50	M12 x 1.75	M10 x 1.5	45.80	8	-

*Values are in millimeters

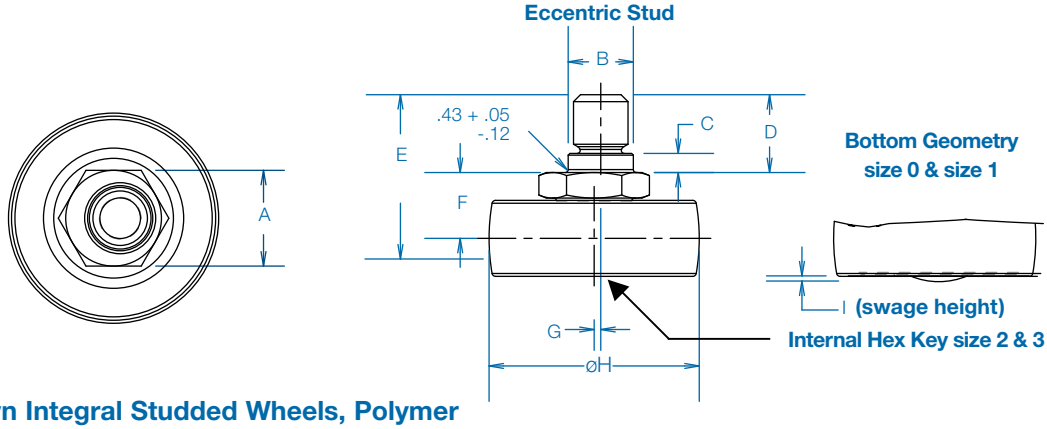

Crown Integral Studded Wheels, Polymer

Size	A	B[1]	C[2]	D[3]	E	F[4]	G	Concentric Stud Thread	Eccentric Stud Thread	H
0	11	5.56	2.16	7.62	16.94	6.15	0.81	M6 x 1.0	M5 x 0.8	14.83
1	12	6.30	2.16	8.10	19.34	7.30	0.84	M8 x 1.25	M6 x 1.0	19.58
2	14	9.53	2.79	11.38	26.56	9.63	0.97	M10 x 1.5	M8 x 1.25	30.73

*Values are in millimeters

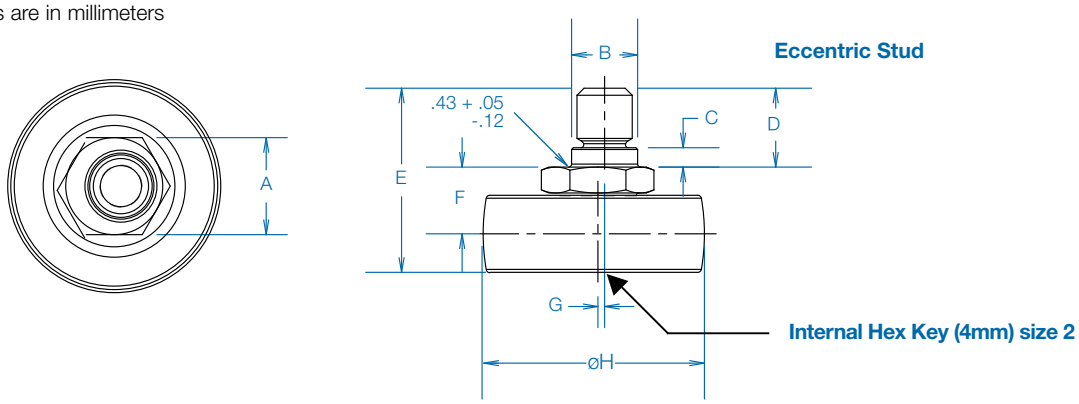

Notes

1. Diameter Tolerance is +0.05/-0.00 2. Height Tolerance is +/-0.13 3. Height Tolerance is +/-0.1 4. Height Tolerance is +/-0.05

© Bishop-Wisecarver Corporation 2006. All rights reserved. www.bwc.com 888.580.8272

Bushings and Journals

Bushings

- Rigidly affixes guide wheels to a mounting surface in a precise, orthogonal fashion
- Material options include 303 stainless steel or nickel plated carbon steel
- Concentric and eccentric configurations allow for fit up adjustment
- Design calls for a fastener to pass through the bushing and the guide wheel, locking the elements into place against the mounting surface
- Standard and low profile head height configurations are available providing flexibility in wheel height position

Journals

- Combines bushing and fastener into a single piece element
- Allows adjustments from the opposite side of the mounting surface for designs where access to the guide wheel is prohibitive
- Reduces overall number of components per guide wheel
- Concentric and eccentric configurations available
- AISI 303 stainless steel

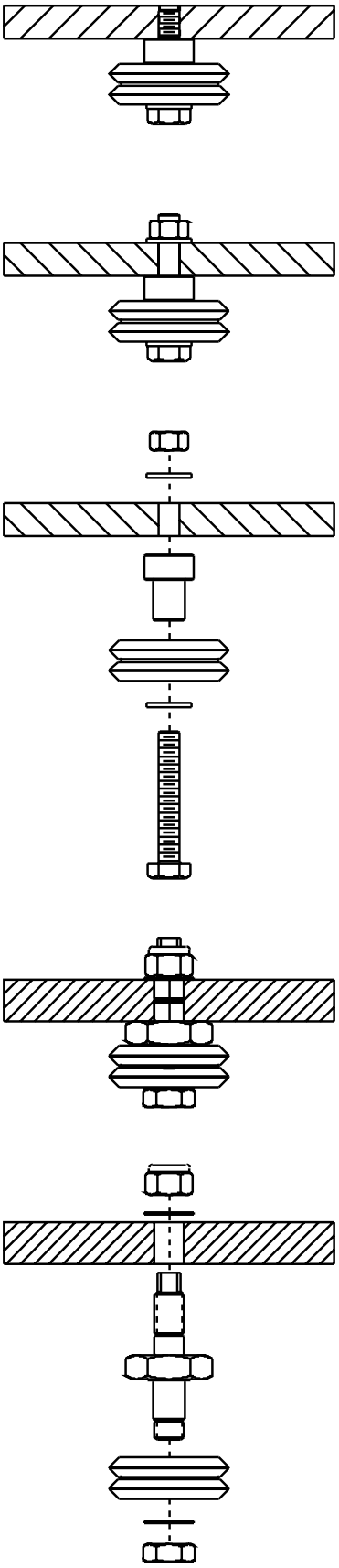

© Bishop-Wisecarver Corporation 2006. All rights reserved www.bwc.com 888.580.8272

Journal Assemblies

DualVee Size	Part Number	Offset	Head Height	Clearance Length	Length Overall	Outside Diameter	Journal Diameter for Mounting Plate Bore	Mounting Plate Thread	Wheel Fastener	Adjustment Flat Width	Hex Size	Maximum Mounting Plate Width	Minimum Mounting Plate Width	Weight in Grams
		EC	HH	CL	L	OD[1]	MPD[2]	MP THREAD	WF THREAD	AFW	HS	MPW MAX	MPW MIN	
0	MJX0A	.010	.250	.635	1.38	.1570	.250	1/4-28	8-32	.125	3/8	.375	.125	14.0
	MJC0A	–	.250	.635	1.38	.1570	.250	1/4-28	8-32	.125	3/8	.375	.125	
1	MJX1A	.012	.250	.695	1.44	.1873	.250	1/4-28	10-32	.125	7/16	.375	.125	16.1
	MJC1A	–	.250	.695	1.44	.1873	.250	1/4-28	10-32	.125	7/16	.375	.125	
2	MJX2A	.024	.281	.966	2.03	.3748	.375	3/8-24	5/16-24	.250	9/16	.500	.187	45.7
	MJC2A	–	.281	.966	2.03	.3748	.375	3/8-24	5/16-24	.250	9/16	.500	.187	
3	MJX3A	.042	.375	1.275	2.53	.4722	.437	7/16-20	7/16-20	.250	3/4	.625	.250	78.0
	MJC3A	–	.375	1.275	2.53	.4722	.437	7/16-20	7/16-20	.250	3/4	.625	.250	
4	MJX4A	.060	.437	1.537	3.04	.5904	.500	1/2-20	1/2-20	.312	7/8	.750	.375	133.1
	MJC4A	–	.437	1.537	3.04	.5904	.500	1/2-20	1/2-20	.312	7/8	.750	.375	
4XL	MJX4XLA	.060	.565	2.045	4.07	.8653	.750	3/4-16	3/4-16	.437	1-1/4	1.125	.750	375.1
	MJC4XLA	–	.565	2.045	4.07	.8653	.750	3/4-16	3/4-16	.437	1-1/4	1.125	.750	

*Values are in inches

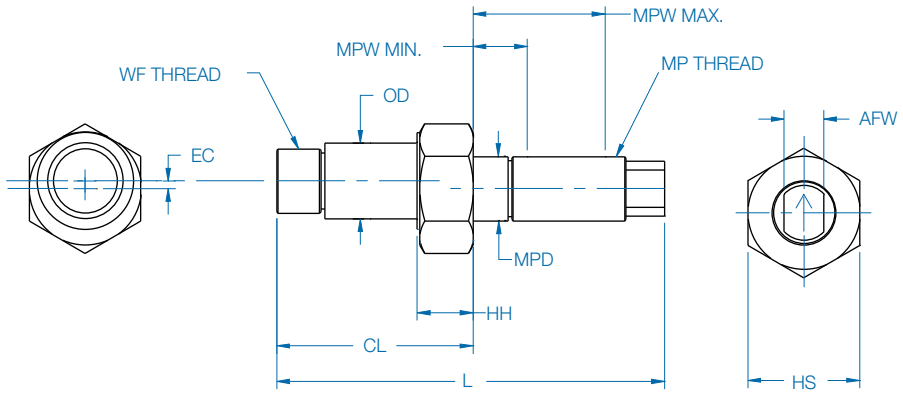

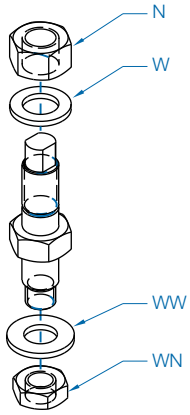

Size	Wheel Washer	Wheel Locknut[6]	Mounting Plate Washer	Mounting Plate Locknut[7]
	WW	WN	W	N
0	N/A	#8 Nut	1/4 Flat Washer SST	1/4 Nut
1	#8 Flat Washer SST	#10 Nut	1/4 Flat Washer SST	1/4 Nut
2	5/16 Flat Washer SST	5/16 Nut	3/8 Flat Washer SST	3/8 Nut
3	7/16 Flat Washer SST	7/16 Nut	7/16 Flat Washer SST	7/16 Nut
4	1/2 Flat Washer SST	1/2 Nut	1/2 Flat Washer SST	1/2 Nut
4XL	3/4 Flat Washer SST	3/4 Nut	3/4 Flat Washer SST	3/4 Nut

Notes

1. Outside diameter tolerance, OD, is +0.0000”, -0.0007”. Size 0 is +0.0000, -.0005.
2. Journal diameter tolerance, MPD is +0.000”, -0.002”.
3. Journal Material is AISI 303 stainless steel.
4. Part # MJX_A indicates eccentric (adjustable) bushing; rotation of eccentric allows fit up adjustment between track and guide wheels.
5. Part # MJC_A indicates concentric (stationary) journal; since concentrically mounted wheels have a fixed position, these journals set the alignment of the carriage assembly to the rail. Concentrically mounted wheels should be configured to carry the majority of the load whenever possible.
6. Locknut, nylon insert GR2, zinc plated.
7. Locknut, nylon insert GR8, zinc plated.

© Bishop-Wisecarver Corporation 2006. All rights reserved. www.bwc.com 888.580.8272

Support Bushings - Standard Profile

DualVee Size	Part Number[1]	Recommended Fastener Size	Hex Size	Offset	Head Height	Length Body	Length Overall	Outside Diameter	Inside Diameter	Head Diameter	Weight in Grams
			HS	EC	HH[6]	LB	LO	OD[2]	ID[7,8]	HD	
1	B1	# 6	–	–	.250	.300	.550	.1873	.138	.44	4.6
	BX1	# 6	7/16	.012	.250	.300	.550	.1873	.138	–	5.1
2	B2	1/4	–	–	.281	.425	.706	.3748	.250	.56	10.3
	BX2	1/4	9/16	.024	.281	.425	.706	.3748	.250	–	11.0
3	B3	5/16	–	–	.375	.615	.990	.4722	.3125	.75	25.0
	BX3	5/16	3/4	.042	.375	.615	.990	.4722	.3125	–	27.1
4	B4	3/8	–	–	.437	.740	1.177	.5904	.375	.88	42.4
	BX4	3/8	7/8	.060	.437	.740	1.177	.5904	.375	–	45.6
4XL	B4XL	9/16	–	–	.565	.990	1.555	.8650	.5625	1.25	112.8
	BX4XL	9/16	1 1/4	.060	.565	.990	1.555	.8650	.5625	–	121.4

*Values are in inches

DualVee Size	Part Number[1]	Recommended Fastener Size	Hex Size	Offset	Head Height	Length Body	Length Overall	Outside Diameter	Inside Diameter	Head Diameter
			HS	EC	HH[6]	LB	LO	OD[2]	ID[7,8]	HD
1	MB1	M4	–	–	6.22	7.6	13.8	4.76	3.96	11.2
	MBX1	M4	12	0.25	6.22	7.6	13.8	4.76	3.96	–
2	MB2	M6	–	–	6.65	10.8	17.4	9.52	6.00	14.2
	MBX2	M6	14	0.61	6.65	10.8	17.4	9.52	6.00	–
3	MB3	M8	–	–	9.47	15.6	25.1	11.99	8.00	19.1
	MBX3	M8	19	1.07	9.47	15.6	25.1	11.99	8.00	–
4	MB4	M10	–	–	11.10	18.8	29.9	15.00	10.00	22.4
	MBX4	M10	22	1.52	11.10	18.8	29.9	15.00	10.00	–
4XL	MB4XL	M14	–	–	14.35	25.1	39.5	21.97	14.00	31.8
	MBX4XL	M14	30	1.52	14.35	25.1	39.5	21.97	14.00	–

*Values are in millimeters

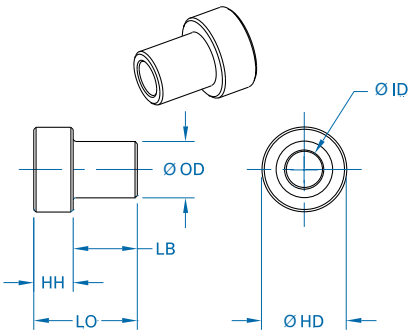

Concentric

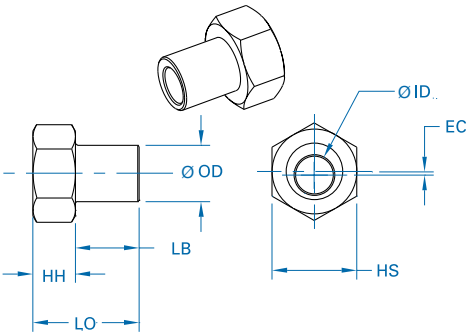

Eccentric

Notes

1. Standard materials are electroless nickel plated carbon steel or 303 stainless steel. Add "-SS" to the end of the part number for stainless steel.
2. The bushing's outside diameter is designed to fit the corresponding size DualVee® guide wheel. Outside diameter (OD) tolerance is +0.000, -0.001.
3. Part # BX_ indicates eccentric (adjustable) bushing; rotation of eccentric allows fit up adjustment between track and guide wheels.
4. All mounting information within this catalog assumes a central position of the eccentric bushing, thus allowing wheel position adjustment from "+EC" to "-EC".
5. Part # B_ or part # MB_ indicates concentric (stationary) bushing; Since concentrically mounted wheels have a fixed position, these bushings set the alignment of the carriage assembly to the rail. Concentrically mounted wheels should be configured to carry the majority of the load whenever possible.
6. Head height (HH) tolerance is ±0.001 inches, or ±0.03 mm.
7. Inside diameter (ID) tolerance is +0.002 inches, -0.001 inches.
8. Inside diameter (ID) tolerance is +0 05 mm -0.025 mm metric, except for MB1 and MBX1, which have a tolerance of +0.05mm, -0.00mm.

© Bishop-Wisecarver Corporation 2006. All rights reserved www.bwc.com 888.580.8272

Support Bushings - Low Profile

DualVee Size	Part Number[1]	Recommended Fastener Size	Hex Size	Offset	Head Height	Length Body	Length Overall	Outside Diameter	Inside Diameter	Head Diameter	Weight in Grams
			HS	EC	HH[6]	LB	LO	OD[2]	ID[7,8]	HD	
1	1PWBC	M4	–	–	.080	.300	.380	.1873	.158	.44	1.5
	1PWBX	M4	7/16	.007	.080	.300	.380	.1873	.158	–	1.6
2	2PWBC	1/4	–	–	.100	.425	.525	.3748	.250	.56	5.7
	2PWBX	1/4	9/16	.024	.100	.425	.525	.3748	.250	–	6.0
3	3PWBC	5/16	–	–	.125	.615	.740	.4722	.3125	.75	13.4
	3PWBX	5/16	3/4	.042	.125	.615	.740	.4722	.3125	–	14.1
4	4PWBC	3/8	–	–	.125	.740	.865	.5904	.375	.88	23.0
	4PWBX	3/8	7/8	.060	.125	.740	.865	.5904	.375	–	24.0
4XL	4XLPWBC	9/16	–	–	.188	.990	1.178	.8650	.5625	1.25	68.2
	4XLPWBX	9/16	1 1/4	.060	.188	.990	1.178	.8650	.5625	–	70.9

*Values are in inches

DualVee Size	Part Number[1]	Recommended Fastener Size	Hex Size	Offset	Head Height	Length Body	Length Overall	Outside Diameter	Inside Diameter	Head Diameter
			HS	EC	HH[6]	LB	LO	OD[2]	ID[7,8]	HD
1	M1PWBC	M4	–	–	2.11	7.6	9.7	4.76	3.96	11.2
	M1PWBX	M4	12	0.18	2.11	7.6	9.7	4.76	3.96	–
2	M2PWBC	M6	–	-	2.64	10.8	13.4	9.52	6.00	14.2
	M2PWBX	M6	14	0.61	2.64	10.8	13.4	9.52	6.00	–
3	M3PWBC	M8	–	–	3.48	15.6	19.1	11.99	8.00	19.1
	M3PWBX	M8	19	1.07	3.48	15.6	19.1	11.99	8.00	–
4	M4PWBC	M10	–	–	3.10	18.8	21.9	15.00	10.00	22.4
	M4PWBX	M10	22	1.52	3.10	18.8	21.9	15.00	10.00	–
4XL	M4XLPWBC	M14	–	–	5.10	25.1	30.3	21.97	14.00	31.8
	M4XLPWBX	M14	30	1.52	5.10	25.1	30.3	21.97	14.00	–

*Values are in millimeters

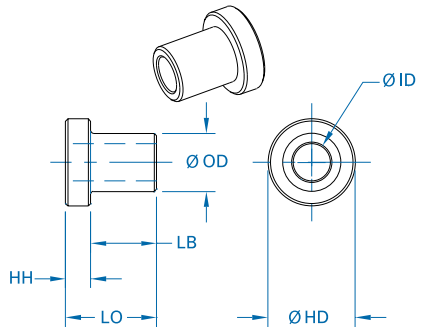

Concentric

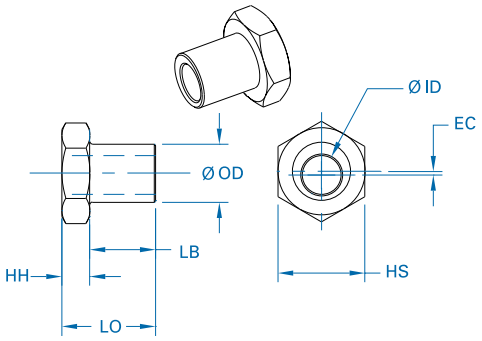

Eccentric

Notes

1. Low profile support bushings are available in 303 stainless steel only.
2. The bushing's outside diameter is designed to fit the corresponding size DualVee® guide wheel. Outside diameter (OD) tolerance is +0.000, -0.001inches or +0.00 mm, -0.03 mm.
3. Part # _PWBX indicates eccentric (adjustable) bushing; rotation of eccentric allows fit up adjustment between track and guide wheels.
4. All mounting information within this catalog assumes a central position of the eccentric bushing, thus allowing wheel position adjustment from "+EC" to "EC".
5. Part # _PWBC or part # M_PWBC indicates concentric (stationary) bushing; Since concentrically mounted wheels have a fixed position, these bushings set the alignment of the carriage assembly to the rail. Concentrically mounted wheels should be configured to carry the majority of the load whenever possible.
6. Head height (HH) tolerance is ±0.001 inches or±0.03 mm.
7. Inside diameter (ID) tolerance is +0.002 inches, -0.001 inches.
8. Inside diameter (ID) tolerance is +0.05 mm, -0.025 mm metric, except for M1PWBC, which have a tolerance of +0.05mm, -0.00mm.

© Bishop-Wisecarver Corporation 2006. All rights reserved. www.bwc.com 888.580.8272

Lubricator Assemblies

Lubricator Profile	DualVee Size	Part Number	Overall Length	Mounting Hole Spacing	Body Length	Height	Width	Vee Height Location	Fastener Hole	Fastener Hole Size Diameter	Fastener
			L	MHS	B	H	W	VH	FD	FS	S[3]
MinVee	0	MVOTL	.70 (17.8 mm)	.472 (12.0 mm)	.23 (5.84 mm)	.360 (9.14 mm)	.30 (7.62 mm)	.17 (4.32 mm)	.115 (2.92 mm)	.094 (2.39 mm)	M2x.4x4mm
Standard Height Bushings	1 & 2	TL12A	1.10 (27.9 mm)	.787 (20.0 mm)	.47 (12.0 mm)	.69 (17.5 mm)	.45 (11.4 mm)	.435 (11.05 mm)	.18 (4.6 mm)	.12 (3.0 mm)	M3x.5x6mm
	3 & 4	TL34A	1.84 (46.7 mm)	1.339 (34.0 mm)	.84 (21.3 mm)	1.20 (30.5 mm)	.74 (18.8 mm)	.753 (19.13 mm)	.29 (7.4 mm)	.17 (4.3 mm)	M4x.7x8mm
Low Profile Bushings	1 & 2	TL12LPA	1.10 (27.9 mm)	.787 (20.0 mm)	.47 (12.0 mm)	.53 (13.5 mm)	.45 (11.4 mm)	.278 (7.06 mm)	.18 (4.6 mm)	.12 (3.0 mm)	M3x.5x6mm
	3 & 4	TL34LPA	1.84 (46.7 mm)	1.339 (34.0 mm)	.84 (21.3 mm)	.84 (21.3 mm)	.74 (18.8 mm)	.485 (12.32 mm)	.29 (7.4 mm)	.17 (4.3 mm)	M4x.7x8mm
Integral Wheels SWI & BWI	1 & 2	TL12BWP	1.13 (28.6 mm)	.799 (20.3 mm)	.47 (12.0 mm)	.58 (14.7 mm)	.45 (24.4 mm)	.323 (8.19 mm)	.18 (4.6 mm)	.12 (3.0 mm)	M3x.5x10mm
	3 & 4	TL34BWP	1.84 (46.7 mm)	1.339 (34.0 mm)	.84 (21.3 mm)	1.01 (25.8 mm)	.74 (18.8 mm)	.597 (15.16 mm)	.29 (7.4 mm)	.17 (4.3 mm)	M3x.5x10mm (size 3) M4x.7x10mm (size 4)

*Values are in inches (millimeters)

- Easy to install/available from stock
- Dispenses a thin film of oil along the Vee way
- Lubricating properties increases load capacity and service life
- Stainless steel lubricator housing
- Lubricant and felt replacements available upon request

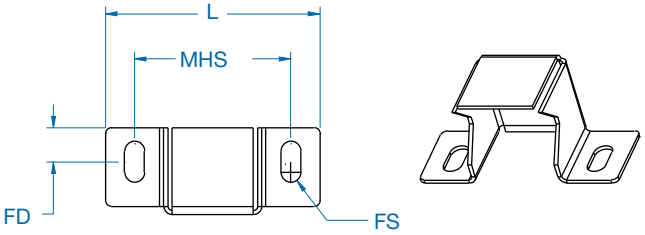

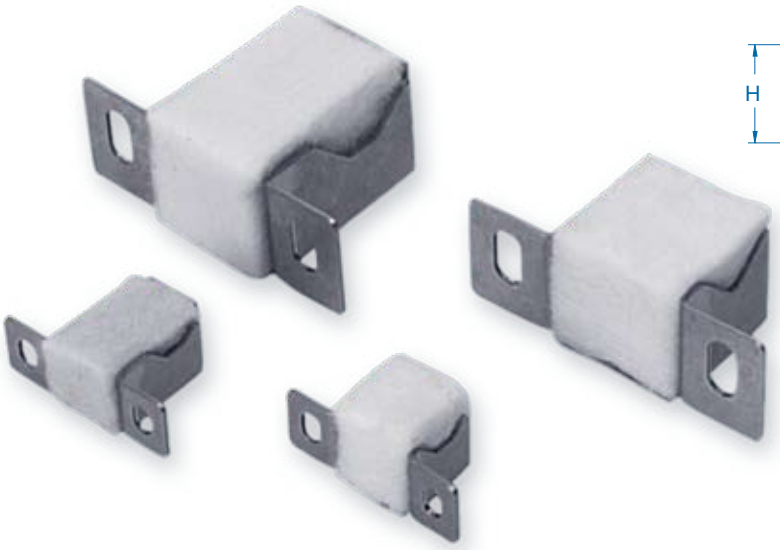

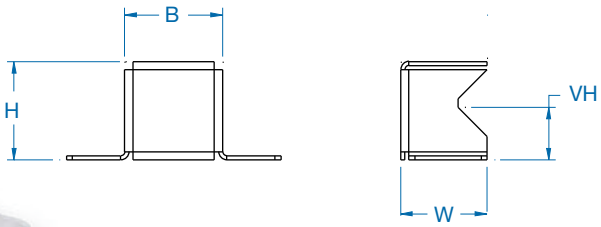

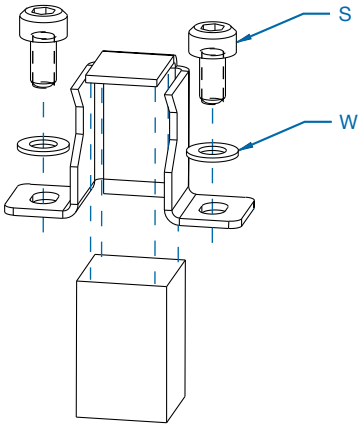

Notes

1. Lubricator housing material per specification ANSI 303, 304, or 316 stainless steel.
2. Felt material is white, pure wool, per specification SAE F-10 or ASTM 9R1.
3. Lubricators are supplied complete with socket head cap screws and washers (stainless steel).
4. A vial of synthetic oil is provided.

© Bishop-Wisecarver Corporation 2006. All rights reserved www.bwc.com 888.580.8272

Wheel Cover/Lubricator Assemblies

Wheel Cover Profile	Size	Part Number	Length	Mounting Hole Spacing	Height	Fastener Height	Width	Vee Height	Fastener Hole Size	Fastener
			L	MHS	H	FH	W	VH	Metric	S[3]
Standard Height Bushing	1	WC1A	1.40 (35.6 mm)	1.20 (30.5 mm)	.71 (8.1 mm)	.32 (8.1 mm)	.90 (22.9 mm)	.404 (10.3 mm)	M2	M2x.4x12 mm
	2	WC2A	2.00 (50.8 mm)	1.68 (42.7 mm)	.95 (24.1 mm)	.40 (10.1 mm)	1.35 (34.3 mm)	.480 (12.2 mm)	M3	M3x.5x16 mm
	3	WC3A	2.67 (67.8 mm)	2.34 (59.4 mm)	1.34 (34.0 mm)	.60 (15.3 mm)	1.98 (50.3 mm)	.690 (17.5 mm)	M3	M3x.5x20 mm
	4	WC4A	3.50 (88.9 mm)	3.07 (78.0 mm)	1.58 (40.1 mm)	.76 (19.3 mm)	2.50 (63.5 mm)	.813 (20.7 mm)	M4	M4x.7x25 mm
Low Profile Bushing	1	WC1LPA	1.40 (35.6 mm)	1.20 (30.5 mm)	.55 (14.0 mm)	.16 (4.1 mm)	.90 (22.9 mm)	.247 (6.3 mm)	M2	M2x.4x8 mm
	2	WC2LPA	2.00 (50.8 mm)	1.68 (42.7 mm)	.77 (19.6 mm)	.22 (5.6 mm)	1.35 (3.43 mm)	.303 (7.7 mm)	M3	M3x.5x12 mm
	3	WC3LPA	2.67 (67.8 mm)	2.34 (59.4 mm)	1.10 (28.0 mm)	.37 (9.4 mm)	1.98 (50.3 mm)	.454 (11.5 mm)	M3	M3x.5x16 mm
	4	WC4LPA	3.50 (88.9 mm)	3.07 (78.0 mm)	1.27 (32.3 mm)	0.45 (11.4 mm)	2.50 (63.5 mm)	.498 (12.6 mm)	M4	M4x.7x20 mm
Integral Wheel SWI and BWI Bushing	1	WC1SWI	1.50 (38.0 mm)	1.25 (31.8 mm)	.525 (13.3 mm)	.055 (1.4 mm)	.96 (24.4 mm)	.287 (7.3 mm)	M3	M3x.5x10 mm
	2	WC2SWI	1.96 (49.8 mm)	1.68 (42.7 mm)	.665 (16.9 mm)		1.345 (34.2mm)	.379 (9.6 mm)		
	3	WC3SWI	2.65 (67.3 mm)	2.34 (59.4 mm)	.915 (23.24 mm)		1.97 (50.0 mm)	.536 (13.6 mm)		
	4	WC4SWI	3.46 (87.9 mm)	3.07 (78.0 mm)	1.155 (29.3 mm)		2.55 (64.8 mm)	.644 (16.4 mm)	M4	M4x.7x10 mm

*Values are in inches (millimeters)

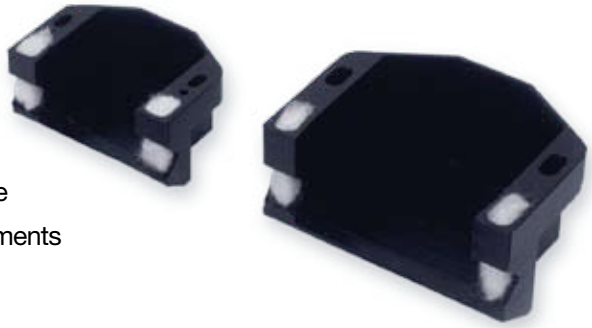

- Protects the wheel/track contact region
- Sweeps aside debris that may collect on the track
- Continually dispenses a thin film of oil along the Vee way
- Lubricating properties increase load capacity and service life
- Covers rolling element contact surface satisfying safety requirements
- Lubricant and felt replacements available upon request

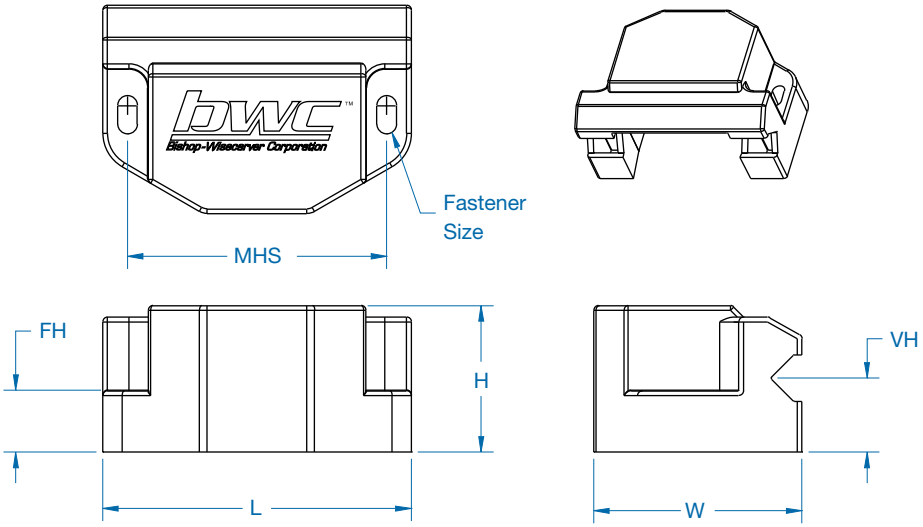

Notes
1. Wheel cover material is ABS black.
2. Felt material is white, pure wool, per specification SAE F-10 or ASTM 9R1.
3. Wheel covers are supplied complete with socket head cap screws and washers (stainless steel).
4. A vial of synthetic oil is provided.

© Bishop-Wisecarver Corporation 2006. All rights reserved. www.bwc.com 888.580.8272

Single Edge Track - Undrilled

DualVee Size	Width	Height	Mounting Shoulder Location	Mounting Shoulder to Center Line	Mounting Shoulder Depth	Weight
	W	H	MDT	MSC	MSD	(lbs./ft)
T1	.437	.187	.125	.031	.062	.183
T2	.625	.250	.187	.031	.094	.343
T3	.875	.343	.250	.062	.109	.690
T4	1.062	.437	.312	.093	.125	1.100

*Values are in inches

Part Numbering

T_-XX	AISI 1045 carbon steel running surface hardened to a minimum of Rc 53, polished and oiled
TS_-XX	AISI 1045 carbon steel running surface unhardened (Rc 22-25), as formed, oiled
T_-SS-XX	AISI 420 stainless steel running surface hardened to a minimum of Rc 40, polished and oiled
TS_-SS-XX	AISI 420 stainless steel running surface unhardened (Rc 20-22), as formed, oiled

The underscore must be filled in with the appropriate DualVee track size (1, 2, 3, or 4)
XX = length in foot increments (1 to 20 feet hardened or 1 to 22 feet unhardened)

Examples

T1-1	represents a size 1 track, carbon steel, hardened, 1 foot length
TS2-SS-12	represents a size 2 track, stainless steel, unhardened, 12 foot length

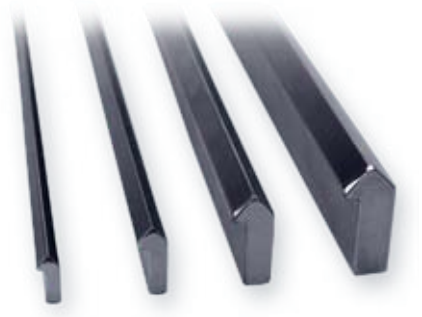

Undrilled

- Easy installation/available from stock
- Patented mounting shoulder allows for accurate positioning of Vee ways
- Available “as formed,” or induction hardened and polished
- Induction hardened track remains soft below the mounting shoulder, allowing for drilling or other machining
- Available in either AISI 1045 carbon steel or 420 stainless steel
- Available undrilled or pre-drilled for ease of installation
- Can be easily butt-joined for stroke lengths exceeding maximum single piece lengths (20 feet plus)
- Optional ground track Ra 0.2 to 0.4 µm (N4-N5) to enhance corrosion resistance of stainless steel track is also available. Please contact customer service for lead time.

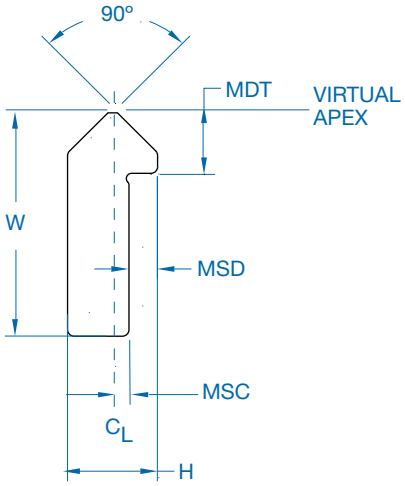

Notes
1. The overall length tolerance is ±1/16 inch.
2. For non-standard track lengths or other non-standard options, contact Bishop-Wisecarver for quotation.
3. Available coating/plating options include black oxide, thin dense chrome, and nickel, contact Bishop-Wisecarver for quotation.
4. Maximum single piece track lengths: hardened = 20 feet, unhardened = 22 feet.

© Bishop-Wisecarver Corporation 2006. All rights reserved www.bwc.com 888.580.8272

Single Edge Track - Drilled Standard Lengths

DualVee Size	Part Number	Number of Holes	Length	End Hole Spacing	Hole to Hole Spacing	Hole Size Thru (Diameter)	Mounting Hole Location
			L[3]	ES[4]	HS[5]	MH[6]	MHL[7]
1	T1-1250-7	7	12.50	.250	2.000	.156	.156
	T1-2450-13	13	24.50				
	T1-3650-19	19	36.50				
	T1-4850-25	25	48.50				
	T1-6050-31	31	60.50				
	T1-7250-37	37	72.50				
2	T2-1263-5	5	12.63	.315	3.000	.203	.219
	T2-2463-9	9	24.63				
	T2-3663-13	13	36.63				
	T2-4863-17	17	48.63				
	T2-6063-21	21	60.63				
	T2-7263-25	25	72.63				
3	T3-1275-5	5	12.75	.375	3.000	.281	.313
	T3-2475-9	9	24.75				
	T3-3675-13	13	36.75				
	T3-4875-17	17	48.75				
	T3-6075-21	21	60.75				
	T3-7275-25	25	72.75				
4	T4-1300-4	4	13.00	.500	4.000	.344	.375
	T4-2500-7	7	25.00				
	T4-3700-10	10	37.00				
	T4-4900-13	13	49.00				
	T4-6100-16	16	61.00				
	T4-7300-19	19	73.00				

*Values are in inches

Part Numbering

T_-XXXX-Y AISI 1045 carbon steel hardened to a minimum of Rc 53, polished and oiled
TS_-XXXX-Y AISI 1045 carbon steel unhardened (Rc 22-25), as formed, oiled
T_-SS-XXXX-Y AISI 420 stainless steel hardened to a minimum of Rc 40, polished and oiled
TS_-SS-XXXX-Y AISI 420 stainless steel unhardened (Rc 20-22), as formed, oiled

The underscore must be filled in with the appropriate DualVee track size (1, 2, 3, or 4)
XXXX = (dimension L) x 100 Y = the total number of holes in the track

Examples

T3-7275-25 represents a size 3 track, carbon steel, hardened, 72.75 inches long, with a total of 25 holes along the length
TS2-SS-1263-5 represents a size 2 track, stainless steel, unhardened, 12.63 inches long, with a total of 5 holes along the length

Drilled

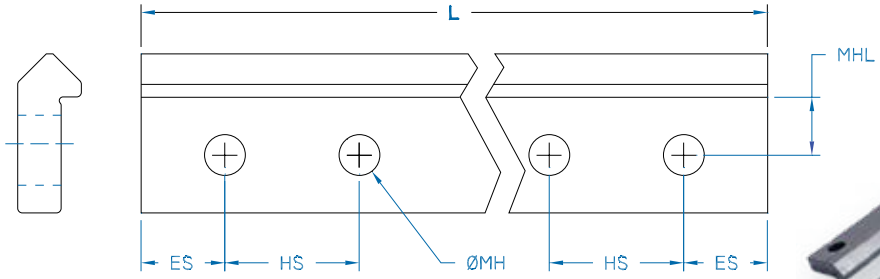

Notes

1. Available coating/plating options include black oxide, thin dense chrome, and nickel.
2. Non-standard hole patterns can be accommodated. Non-standard track options are quoted upon request.
3. Overall length tolerance is ±0.015 inches (dimension L).
4. End hole spacing tolerance is ±0.005 (dimension ES).
5. Hole to hole spacing tolerance is ±0.005 non-cumulative (dimension HS).
6. Hole diameter tolerance is ±0.005 (dimension MH).
7. Mounting hole location tolerance is ±0.005 (dimension MHL).
8. Optional ground track Ra 0.2 to 0.4 µm (N4-N5) to enhance corrosion resistance of stainless steel track is also available. Please contact customer service for lead time.

© Bishop-Wisecarver Corporation 2006. All rights reserved. www.bwc.com 888.580.8272

Double Edge Track - Size 0 MinVee™ Drilled and Undrilled

- Patented mounting shoulder to accurately position Vee ways
- Double edge design ensures parallel Vee ways
- Pre-drilled track, immediate installation, no matching required
- AISI 1045 carbon steel, hardened (Rc 53), polished, oiled
- AISI 1045 carbon steel, unhardened (Rc 22-25), as formed, oiled
- Custom coating/plating options: black oxide, electroless and nickel

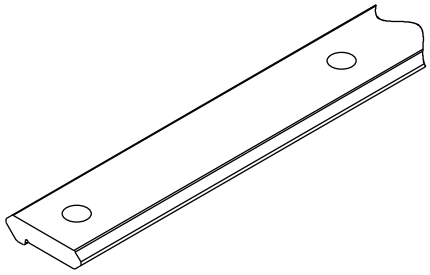

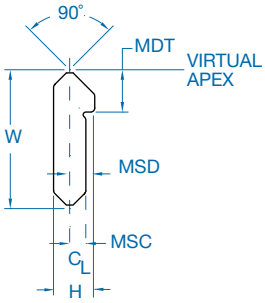

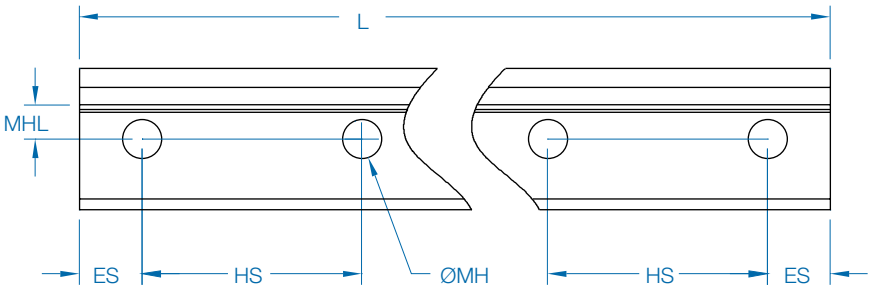

Size 0 Drilled

Part Number	Number of Holes	Length	Vee Way Surface Condition	Vee Way Surface Hardness	Hole Spacing	End Hole Spacing	Hole Size (Thru)	Hole Location
		L[2]		Rockwell C	HS[4]	ES[3]	MH[5]	MHL[6]
TD0-650-4	4	6.50	Hardened	RC 53 Minimum	2.000	.25	.156	.138
TD0-1250-7	7	12.50						
TD0-1850-10	10	18.50						
TD0-2450-13	13	24.50						
TD0-3050-16	16	30.50						
TD0-3650-19	19	36.50						
TDS0-650-4	4	6.50	Unhardened	RC 22-25	2.000	.25	.156	.138
TDS0-1250-7	7	12.50						
TDS0-1850-10	10	18.50						
TDS0-2450-13	13	24.50						
TDS0-3050-16	16	30.50						
TDS0-3650-19	19	36.50						

*Values are in inches

Notes

1. For non-standard track lengths or other non-standard options, contact Bishop-Wisecarver for quotation.
2. The over-all length tolerance is ±0.015 inches (dimension L).
3. End hole spacing tolerance is ±0.005 inches (dimension ES).
4. Hole to hole spacing tolerance is ±0.005 inches (dimension HS).
5. Hole diameter tolerance is ±0.005 inches (dimension MH).
6. Mounting hole location tolerance is ±0.005 inches (dimension MHL).

Size 0 Undrilled

DualVee Size	Part Number	Width	Height	Mounting Shoulder Location	Mounting Shoulder to Center Line	Mounting Shoulder Depth	Weight	Condition	Vee Way Surface Hardness
		W	H	MDT	MSC	MSD	(lbs./ft)		Rockwell C
0	TD0	.516	.153	.158	.06	.033	.171	Hardened	Rc 53 min
0	TDS0	.516	.153	.158	.06	.033	.171	Unhardened	Rc 22-25

*Values are in inches

Notes

1. The over-all length tolerance is ± 1/16 inch.
2. For non-standard track lengths or other non-standard options, contact Bishop-Wisecarver for quotation.
3. Maximum single piece track lengths: hardened = 20 feet; unhardened = 22 feet.

© Bishop-Wisecarver Corporation 2006. All rights reserved www.bwc.com 888.580.8272

Size 0 MinVee™ Wheel Plates

Size	Part Number	Overall Length	Overall Width	Assembly Height	Wheel Plate Height	Wheel Vee Height	Wheel Spacing Width	Mounting Hole Length	Track Lubricator Mounting Hole Spacing Width	Track Lubricator Mounting Hole Spacing Length (same side as Track)	Track Lubricator Mounting Hole Thread
	Non-Driven	A	B	C	D	E	F	G	H	I	J
0 MinVee™	MV0WPA MV0WPAX MV0WPAP	1.75 in 44.45 mm	2.00 in 50.8 mm	.709 in 18.0 mm	.310 in 7.87 mm	.242 in 6.15 mm	.984 in 24.99 mm	.866 in 22.0 mm	.472 in 11.99 mm	.692 in 17.6 mm	M2 x 0.4 mm

Load Capacity - Based on 100km Service Life

Wheel Carriage Type	Axial Working Load	Radial Working Load	Pitch Moment	Yaw Moment	Roll Moment	Weight in Grams
	L_A	L_R	M_P	M_Y	M_R	
Steel	540 N	490 N	7.9 Nm	8.6 Nm	6.2 Nm	84.3
	121.4 lbf	110.2 lbf	69.9 lbf in	76.1 lbf in	54.9 lbf in	
	Maximum Speed		5m/sec		(16.4 ft/sec)	
	Maximum Acceleration		49m/sec^2		(5 g's)	
Polymer	66.7 N	65 N	1.4Nm	4.5Nm	1Nm	71.7
	15 lbf	14.6 lbf	12.4 lbf in	39.8 lbf in	8.8 lbf in	
	Maximum Speed		1m/sec		(39.9 ft/sec)	
	Maximum Acceleration		29.4m/sec^2		(3g's)	

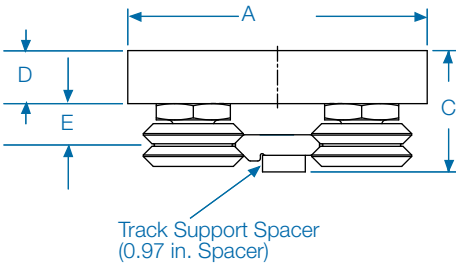

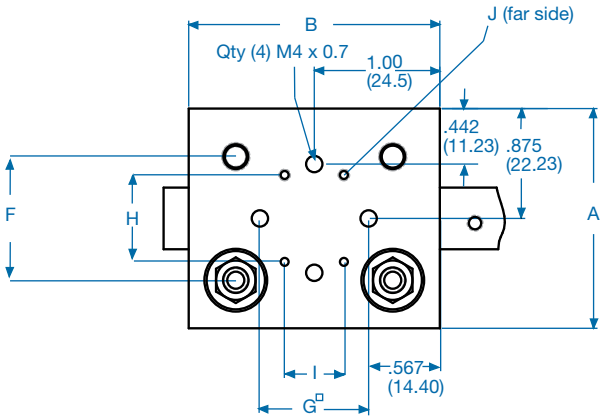

- Track Support .097 in. spacer, part# MV0S18H (optional)

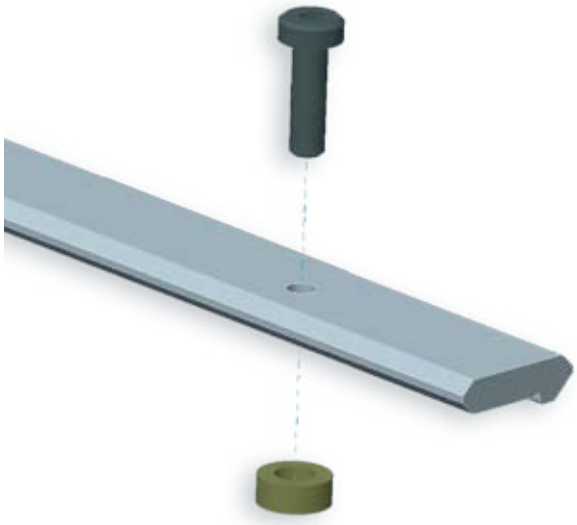

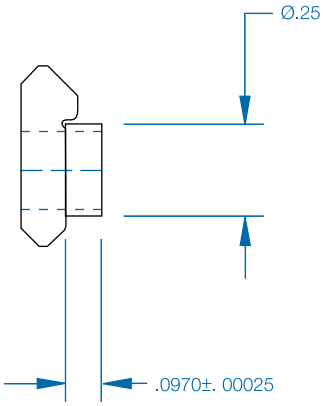

© Bishop-Wisecarver Corporation 2006. All rights reserved. www.bwc.com 888.580.8272

QuickTrak® Wheel Plates and Track

Loads and Speeds

Load Capacities	Metric	English
L_A	133 N	30 lbs.
L_R	110 N	24 lbs.
Maximum Speed	1 m/s	39.3 in./sec
Maximum Acceleration	3.0 g's	
Moment Capacities		
Pitch, M_P	9 N-m	79.7 lbf.-in.
Yaw M_Y	4 N-m	35.4 lbf.-in.
Roll, M_R	3 N-m	26.5 lbf.-in.
Maximum Single Piece Track Plate Length	3.65 meters	143.7 in.
Maximum Travel Length-Belt System (Single Piece Support Beam)	3530 mm	138.18 in.
Maximum Travel Length - Lead Screw System	900 mm	35.4 in.

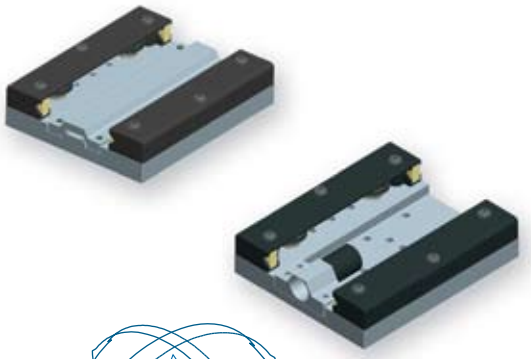

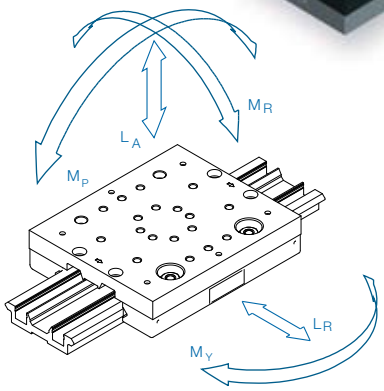

Wheel Plate

- Multiple mounting holes provide a highly versatile platform
- Mounting holes configured for gantry applications (with optional bracketry)
- Wheel Plate weights:
  - 1.13 lbs. - belt
  - 0.99 lbs. - lead screw

L		WD		L1		L2		L3		W1		W2		W3		MMTHD
(mm)	(inch)	(mm)	(inch)	(mm)	(inch)	(mm)	(inch)	(mm)	(inch)	(mm)	(inch)	(mm)	(inch)	(mm)	(inch)	
120.0	4.72	100.0	3.94	74.47	2.932	30.0	1.181	14.48	.57	70.0	2.758	29.26	1.152	9.91	.39	M5x0.8

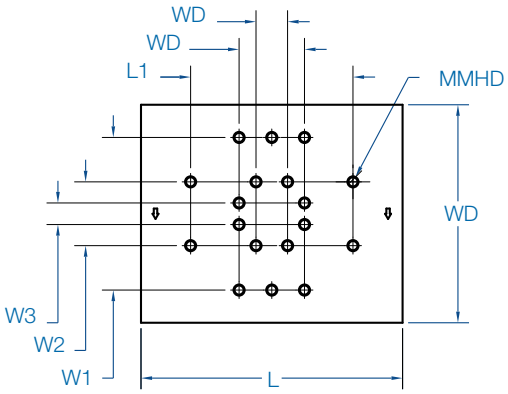

Track Plate

H		VH		V		THV		HLS		HLW		HLD	
(mm)	(inch)	(mm)	(inch)	(mm)	(inch)	(mm)	(inch)	(mm)	(inch)	(mm)	(inch)	(mm)	(inch)
12.7	.50	10.11	.398	55.77	2.195	56.44	2.222	100	3.94	30	1.18	4.8	.19

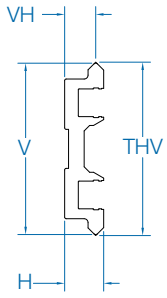

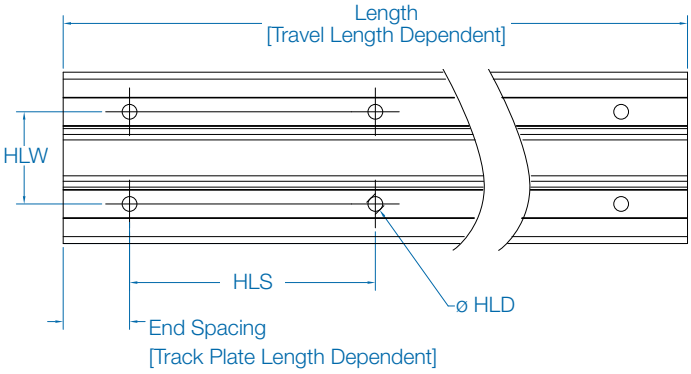

© Bishop-Wisecarver Corporation 2006. All rights reserved www.bwc.com 888.580.8272

Wheel Plates: Basic

Size	Part Number				Overall Length	Overall Width	Assembly Height	Wheel Plate Height	Wheel Vee Height
	Shielded Wheels		Sealed Wheels		A	B	C	D	E
	Track Lubricator	Wheel Cover	Track Lubricator	Wheel Cover					
1	BWP1SWTLBC	BWP1SWWCBC	BWP1XSWTLBC	BWP1XSWWCBC	3.54 in (90.0 mm)	3.15 in (80.0 mm)	.909 in (23.09 mm)	.446 in (11.33 mm)	.733 in (18.63 mm)
2	BWP2SWTLBC	BWP2SWWCBC	BWP2XSWTLBC	BWP2XSWWCBC	5.00 in (127.0 mm)	4.57 in (116.0 mm)	1.165 in (29.59 mm)	.567 in (14.40 mm)	.946 in (24.03 mm)
3	BWP3SWTLBC	BWP3SWWCBC	BWP3XSWTLBC	BWP3XSWWCBC	6.77 in (172.0 mm)	6.50 in (165.0 mm)	1.572 in (39.93 mm)	.723 in (18.36 mm)	1.260 in (32.00 mm)
4	BWP4SWTLBC	BWP4SWWCBC	BWP4XSWTLBC	BWP4XSWWCBC	9.53 in (242.0 mm)	8.74 in (222.0 mm)	1.871 in (47.52 mm)	.852 in (21.64 mm)	1.496 in (38.00 mm)

*Values are in inches (millimeters)

Size	Wheel Spacing Length	Wheel Spacing Width	Mounting Hole Length	Mounting Hole Width 1	Mounting Hole Width 2	Mounting Hole Thread	Belt/Chain Coupler Mounting Hole to Edge	Belt/Chain Coupler Mounting Hole to Hole Length	Coupler Fastener Belt/Chain Drive	Weight in Grams
	F	G	H	I	J	K	L	M	N	
1	2.00 in (50.8 mm)	2.098 in (53.29 mm)	1.869 in (50.01 mm)	1.969 in (50.0 mm)	.984 in (25.0 mm)	M4 x 0.7	1.274 in (32.36 mm)	1.05 in (26.67 mm)	M5	308.0
2	3.00 in 76.2 mm	3.150 in (80.0 mm)	2.992 in (76.0 mm)	2.992 in (76.0 mm)	1.496 in (38.0 mm)	M6 x 1.0	1.600 in (40.6 mm)	1.80 in (45.7 mm)	M8	830.0
3	4.00 in (101.6 mm)	4.300 in (109.22 mm)	3.937 in (100.0 mm)	3.937 in (100.0 mm)	1.969 in (50.0 mm)	M8 x 1.25	2.236 in (56.79 mm)	2.30 in (58.42 mm)	M10	2141.0
4	6.00 in (152.4 mm)	5.774 in (146.66 mm)	5.984 in (152.0 mm)	5.984 in (152.0 mm)	2.599 in (66.0 mm)	M10x1.5	2.764 in (70.21 mm)	4.00 in (101.6 mm)	M12	4754.0

*Values are in inches (millimeters)

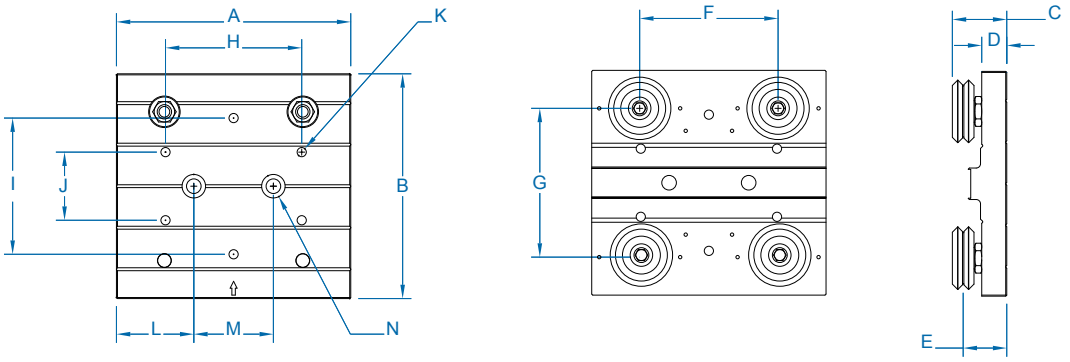

Belt/Chain Driven Carriage

© Bishop-Wisecarver Corporation 2006. All rights reserved.

Wheel Plates: Wiper Style

Size	Part Number		Overall Length	Overall Width	Assembly Height	Wheel Plate Height	Wheel Vee Height	Wheel Spacing Length
	Carbon Steel	Corrosion Resistant	A	B	C	D	E	F
1	M1AWPW	M1AWPW-SS	3.700 in (93.98 mm)	3.07 in (78.0 mm)	.730 in (18.54 mm)	.650 in (16.51 mm)	.374 in (9.50 mm)	2.00 in (50.8 mm)
2	M2AWPW	M2AWPW-SS	5.114 in (129.90 mm)	4.54 in (115.3 mm)	1.041 in (26.44 mm)	.916 in (23.27 mm)	.550 in (13.97 mm)	3.00 in (76.2 mm)
3	M3AWPW	M3AWPW-SS	6.990 in (177.55 mm)	6.35 in (161.3 mm)	1.403 in (35.64 mm)	1.193 in (30.30 mm)	.709 in (18.01 mm)	4.00 in (101.6 mm)
4	M4AWPW	M4AWPW-SS	9.600 in (243.84 mm)	8.39 in (213.1 mm)	1.798 in (45.67 mm)	1.553 in (39.45 mm)	.945 in (24.0 mm)	6.00 in (152.4 mm)

*Values are in inches (millimeters)

Size	Wheel Spacing Width	Mounting Hole Length 1	Mounting Hole Length 2	Mounting Hole Width 1	Mounting Hole Width 2	Mounting Hole Thread	Weight in Kg
	G	H	I	J	K	L	
1	2.098 in (53.29 mm)	N/A	1.969 in (50.0 mm)	1.969 in (50.0 mm)	.984 in (25.0 mm)	M4 x 0.7	.19
2	3.150 in (80.01 mm)	1.181 in (30.0 mm)	2.992 in (76.0 mm)	2.992 in (76.0 mm)	1.496 in (38.0 mm)	M6 x 1.0	.62
3	4.300 in (109.22 mm)	1.496 in (38.0 mm)	3.937 in (100.0 mm)	3.937 in (100.0 mm)	1.969 in (50.0 mm)	M8 x 1.25	1.61
4	5.774 in (146.66 mm)	2.598 in (66.0 mm)	5.984 in (152.0 mm)	5.984 in (152.0 mm)	2.599 in (66.0 mm)	M10 x 1.5	4.00

*Values are in inches (millimeters)

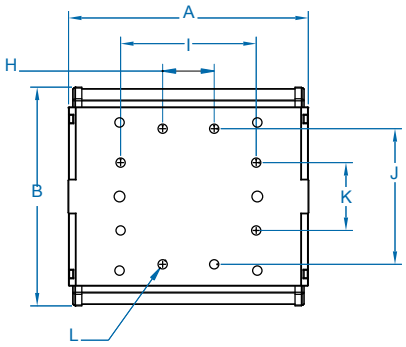

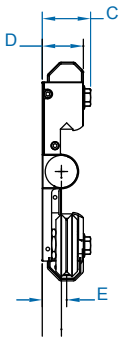

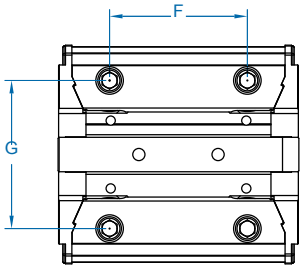

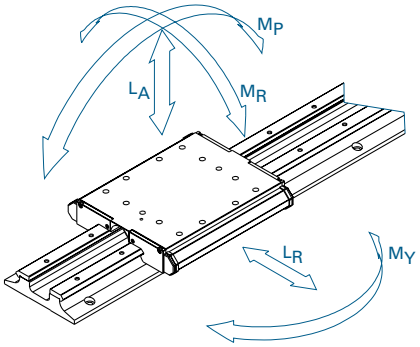

DualVee Size	Radial Working Load Capacity	Axial Working Load Capacity	Pitch Moment Capacity	Yaw Moment Capacity	Roll Moment Capacity
	L_R max (N)	L_A max (N)	M_P (NM)	M_Y (NM)	M_R (NM)
1	1166	988	25	30	26
2	2805	2449	93	107	98
3	6026	6668	339	306	364
4	9220	15682	1195	703	1150

Load Capacity - 4 wheel LoPro style Linear guide (wiper wheel plate and basic wheel plate configurations) based on 100 km service life

© Bishop-Wisecarver Corporation 2006. All rights reserved www.bwc.com 888.580.8272

Size 1 to 4 Track Plate Assemblies

- Provides the lowest profile linear guidance
- Induction-hardened, single edge track is available in either carbon steel or stainless steel. Add -SS to end of part number for stainless steel version when ordering.
- Track plate assemblies are butt joinable for long stroke requirements
- Lightweight anodized aluminum substrate

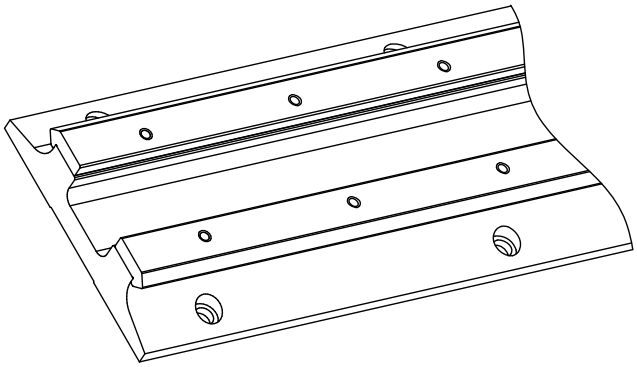

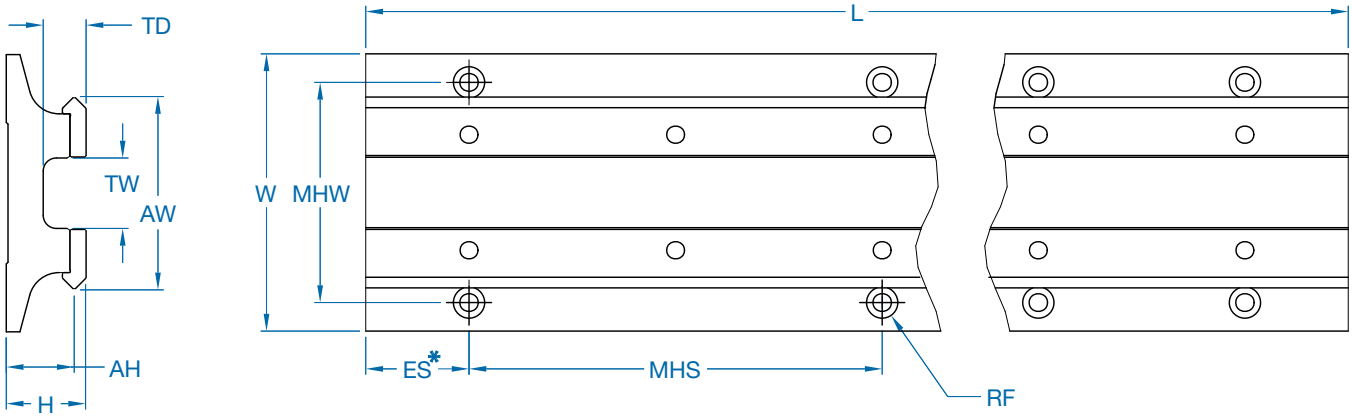

*ES = End Spacing; Dimension is contingent upon track plate length. Please consult factory.

Size	Part Number		Width	Overall Height	Vee Height	Vee Width	Inner Width
			W	H	AH	AW	TW
1	M1ATP	M1ATP-SS	50.0 mm (1.969 in)	15.9 mm (.625 in)	13.5 mm (.531 in)	37.4 mm (1.473 in)	12.7 mm (.500 in)
2	M2ATP	M2ATP-SS	72.0 mm (2.835 in)	22.2 mm (.874 in)	19.0 mm (.748 in)	54.6 mm (2.150 in)	20.3 mm (.799 in)
3	M3ATP	M3ATP-SS	102.0 mm (4.016 in)	29.4 mm (1.157 in)	25.0 mm (.984 in)	71.1 mm (2.799 in)	25.9 mm (1.020 in)
4	M4ATP	M4ATP-SS	140.0 mm (5.512 in)	36.6 mm (1.441 in)	31.0 mm (1.221 in)	95.8 mm (3.773 in)	39.4 mm (1.551 in)

Size	Part Number	Inner Depth	Mounting Hole Width	Mounting Hole Length Space	Recommended Fastener	Weight in Kg/m
		TD	MHW	MHS	RF-Low Head Cap Screws	
1	M1ATP	9.3 mm (.366 in)	40.0 mm (1.575 in)	76.0 mm (2.992 in)	M3	1.64
2	M2ATP	12.9 mm (.508 in)	59.0 mm (2.323 in)	126.0 mm (4.961 in)	M5	3.45
3	M3ATP	15.8 mm (.622 in)	81.0 mm (3.189 in)	152.0 mm (5.984 in)	M6	6.00
4	M4ATP	22.9 mm (.902 in)	111.0 mm (4.370 in)	178.0 mm (7.008 in)	M8	10.02

*Values are in millimeters (inches)

© Bishop-Wisecarver Corporation 2006. All rights reserved. www.bwc.com 888.580.8272

Mounting Dimensions/Formula

DualVee®-based Wheel Plate and Track Plate Assemblies

When fabricating a DualVee® linear guide from componentry, the following (formulae) are applicable for mating carriage plate and track plate designs:

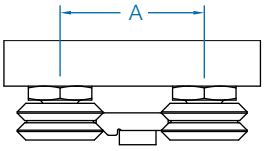

Figure 1 Double Edge Mounting (Size 0 only)

Size 0

For size 0 double edge track using size 0 guide wheels, A = 0.984 (25.0 mm) see Figure 1.

Size 1 to 4XL

For sizes 1 through 4 DualVee® single edge track with equivalent sized guide wheels:

- Inboard Mounting (See Figure 2): A = B + X
- Outboard Mounting (See Figure 3): A = C - X
- Exterior Mounting (See Figure 4): A = D - Y

A = hole centers for wheel plate

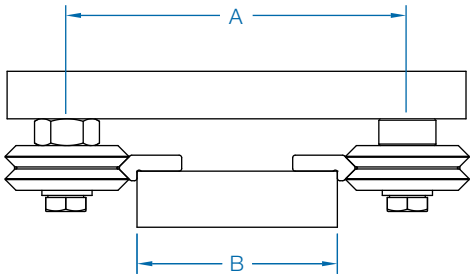

Figure 2 Inboard Mounting

Mounting Constants

DualVee Size	X		Y	
	inch	mm	inch	mm
1	.874	22.20 mm	.934	23.72 mm
2	1.374	34.90 mm	1.436	36.47 mm
3	2.000	50.80 mm	2.124	53.95 mm
4	2.624	66.60 mm	2.750	69.85 mm
4XL	3.124	79.35 mm	3.500	88.90 mm

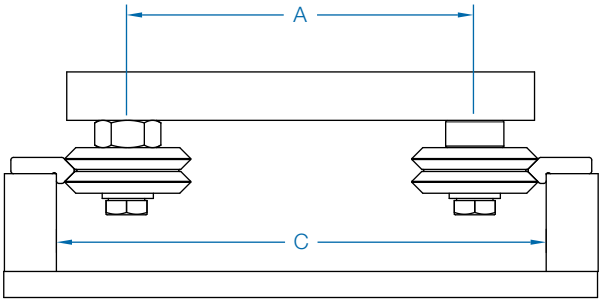

Figure 3 Outboard Mounting

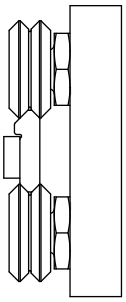

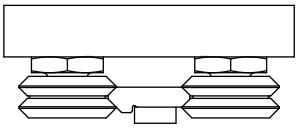

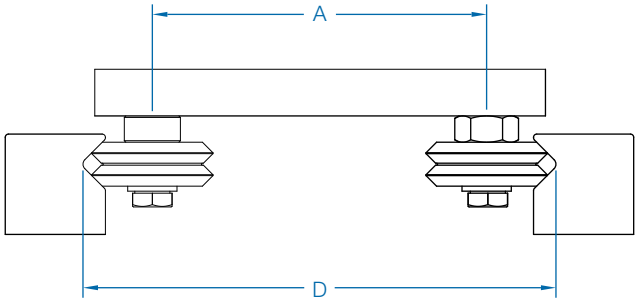

Figure 4 Exterior Mounting

Suitable for Radial or Axial Mounting

Notes

1. Information above uses the same size DualVee® track and wheel except for size 4XL which uses W4XXL guide wheel with size T4 track.
2. Side views shown only, length of wheel plates can be any length required.
3. It is recommended that wheel plates be constructed with concentric bushings on one side of the plate and eccentric bushings on the opposing side.
4. “D” dimension is to the theoretical sharp of the 90° angle.

© Bishop-Wisecarver Corporation 2006. All rights reserved www.bwc.com 888.580.8272

Load/Life Relationship

Several factors influence the service life of a DualVee linear guide. Through research and development spanning over thirty years, Bishop-Wisecarver has devised a simple method to estimate the load/life relationship for a specific DualVee guide mechanism under defined loading conditions. The methodology accounts for the size of the DualVee bearing elements, relative spacing, and the orientation, location, and magnitude of the load. The equation is based upon clean and well lubricated track conditions; so for applications where lubrication is prohibitive, a derating factor must be applied.

It is important to note that secondary considerations such as maximum velocity, acceleration rates, duty cycle, stroke length, environmental conditions, the presence of shock and vibration, and extreme temperature ranges can all impact service life to varying degrees. As such, the sizing method is considered only as a guideline for the sizing of DualVee components and assemblies.

Load/Life Equation – Sizing and Selection

The load/life estimation requires a basic understanding of the principles of statics, the ability to work with free body diagrams, and the capacity to resolve externally applied forces on a carriage assembly into the radial and axial reaction forces at each guide wheel in the design. The life of a DualVee guide will be limited to the life of the most heavily loaded bearing in the design.

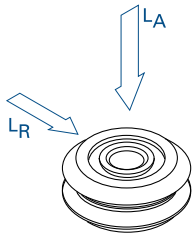

Step 1: Calculate the resultant radial and axial loads reflected to each bearing element in the linear guide design

All standard considerations involved in statics calculations must be accounted for, including inertial forces, gravitational forces, external forces such as tool pressure, bearing element spacing, and magnitude and direction of the payload. Any external forces that generate a reaction through the wheel/track interface need to be considered. If assistance is required in resolving specific loads into the resultant reaction forces at the guide wheel interface, contact our Applications Engineering staff for support. It is recommended that the Application Data Sheet on page 33 or online form be submitted beforehand, with as much application information detailed as possible.

Step 2: Calculate the load factor for the most heavily loaded bearing

$$L_F = L_A/L_{Amax} + L_R/L_{Rmax}$$

Where L_F = Load Factor
L_A = Resultant axial load on the guide wheel
L_{Amax} = The maximum axial working load capacity of the guide wheel
L_R = Resultant radial load on the guide wheel
L_{Rmax} = The maximum radial working load capacity of the guide wheel

- Bearings should be sized such that $L_F \leq 1$
- The most heavily loaded bearing will have the highest load factor

Due to varying application load and speed parameters and environmental conditions, the appropriate adjustment factor must be applied to the life equation.

Adjustment Factor (A_F)	Application Conditions
1.0-0.7	Clean, low speed, low shock, low duty
0.7-0.4	Moderate contaminants, medium duty, medium shock, low to medium vibration, moderate speed
0.4-0.1	Heavy contamination, high acceleration, high speed, medium to high shock, high vibration, high duty cycle

Step 3: Calculate life by applying the load factor to the load/life equation below:

DualVee Size	Life Constant	
	Inches of Travel Life	Kilometers of Travel Life
0	1.65×10^6	41
1	2.19×10^6	55
2	3.47×10^6	87
3	5.19×10^6	130
4	6.84×10^6	151
4XL	8.58×10^6	215

$$\text{Life} = [L_C/(L_F)^3]\ A_F$$

Where L_F = Load Factor
L_C = Life Constant
A_F = Adjustment Factor

© Bishop-Wisecarver Corporation 2006. All rights reserved. www.bwc.com 888.580.8272

Load/Life Equation – Sizing and Selection

Step 1: Calculate loads on each bearing

Given below are force equations for some common configurations.

Scenario 1

$F_1 = \frac{L(x-a)}{x}$ (axial force)

$F_2 = L - \frac{L(x-a)}{x}$ (axial force)

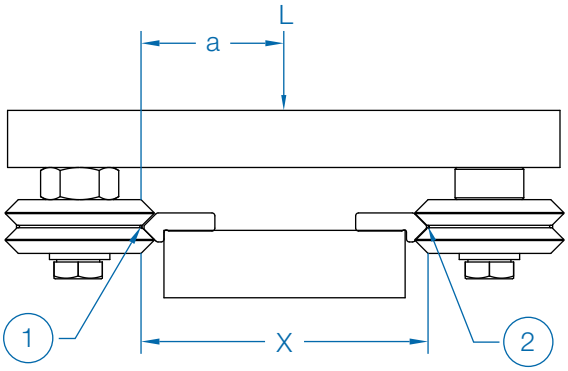

Scenario 1

Scenario 2

$F_1 = \frac{L(x+a)}{x}$ (axial force)

$F_2 = -\frac{L(x+a)}{x} + L$ (axial force)

Scenario 3

$F_1 = \frac{L(x)}{y}$ (axial force)

$F_2 = -\frac{L(x)}{y}$ (axial force)

$F_1 = L$ (radial force)

*Note: Since carriages use 4 wheels, 2 wheels absorb the load at both points 1 & 2, divide the calculated load by 2 to obtain the load on each wheel.

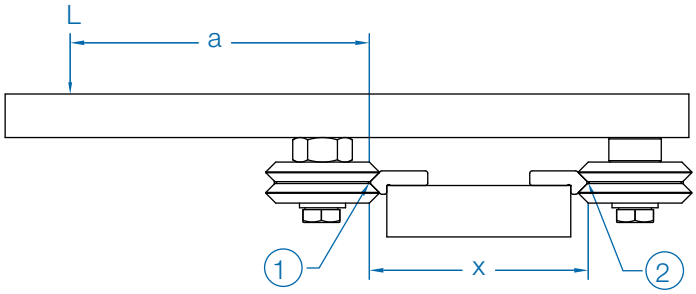

Scenario 2

Example: Scenario 3

L = 200 lbs

X = 15 inches

Y = 5 inches

$F_1 = \frac{200(15)}{5}$ = 600 lbs (axial force) 300 lbs per wheel

$F_2 = -\frac{200(15)}{5}$ = -600 lbs (axial force) -300 lbs per wheel

F_1 = 200 lbs (radial force) 100 lbs per wheel

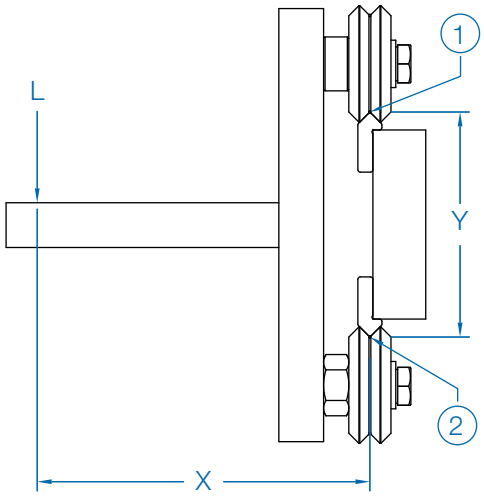

Scenario 3

Step 2: Calculate the load factor for the most heavily loaded bearing using the above example with size W4X guide wheel, $L_{A(MAX)}$ and $L_{R(MAX)}$ from load rating chart pg 6.

$L_F = L_A / L_{A(MAX)} + L_R / L_{R(MAX)}$

$L_F = 300 / 900 + 100 / 2181 = 0.38$

Step 3: Calculate life estimate

See page 27 for life constants, A_F assumed at 1

$\text{Life} = [L_C / (L_F)^3]\, A_F = [6.84 \times 10^6 / (0.38)^3] \times 1 = 124.7 \times 10^6$ inches

© Bishop-Wisecarver Corporation 2006. All rights reserved www.bwc.com 888.580.8272

Application Notes

As a matter of good engineering practice the DualVee® components should not be used where their wear or failure could cause personal injury

Track Mounting

In most DualVee® applications, accuracy plays a small role in the successful implementation of a guide wheel system. The flatness, straightness, and parallelism of the plate or bar to which the DualVee® track is attached (bolted) determine the accuracy of the system. Cold finished or extruded bar or plate is adequate for many applications. The DualVee® track incorporates a mounting shoulder to locate the track on the bar or plate.

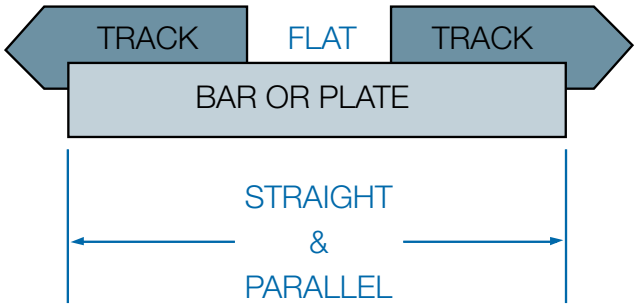

Greater accuracy is obtained by using a plate or bar that has been ground flat and parallel on the mounting surfaces. To achieve straightness and flatness characteristics to within N grade accuracy levels is fairly routine (± .004 inch; ± 0.10 mm). In fact, accuracies as low as ± .001 inch (± 0.03 mm) have been achieved using carefully prepared mounting surfaces in relatively short stroke applications (1-3 feet; 0.3-1 m). For designs requiring accuracy levels of ±.005 inch and better, mounting surfaces must be prepared straight and flat, and appropriate doweling or reference edge assembly techniques must be employed.

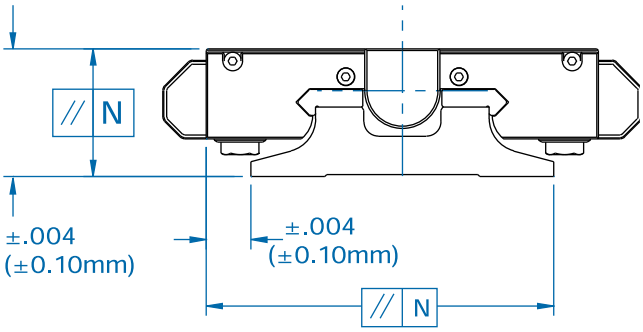

Figure 1:
Running parallelism end view.

For single carriage measured at any point along the rail:
Variation in carriage height: ± .004 inch (± 0.10 mm)
Variation in carriage width: ± .004 inch (± 0.10 mm)
For multiple carriages measured at the same location along the rail:
Variation in carriage height: ± .001 inch (± 0.025 mm)
Variation in carriage width: ± .001 inch (± 0.025 mm)

Figure 2:
Allowable tolerances for straightness and flatness of travel — grade N

Track Life - Hardened, Un-Hardened Track

For maximum loading and heavy continuous use, the "T" series hard edge track should be used. For prototype or light duty intermittent use, the "TS" series unhardened track can be used at a lower cost.

Long Track Lengths - Track Splicing Considerations

Precut lengths of track are not suitable for butting end to end. Please contact the factory when track lengths longer than the maximum available single piece lengths are required. Track that is suitable for butting is available on request. When constructing track systems longer than 20 feet, the joints on parallel tracks should be staggered for greater accuracy and smoothness.

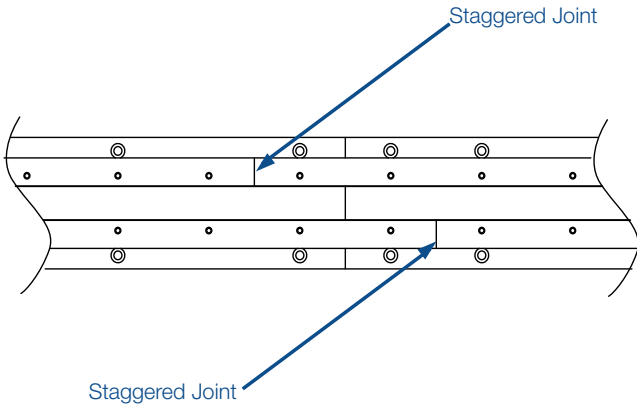

Harsh (Dirty) Enviroments/Wear Resistance

Since the circumference of the wheel is greater at the major diameter than at the minor diameter, there is a constant wiping action on the track producing a self cleaning effect. As such, DualVee® guide wheels are employed in a wide variety of harsh environments, including the presence of metal chips, powders, fibers, slurries, etc. It is important to note that such environments will often limit the service life of a DualVee® linear guide to some extent.

© Bishop-Wisecarver Corporation 2006. All rights reserved. www.bwc.com 888.580.8272

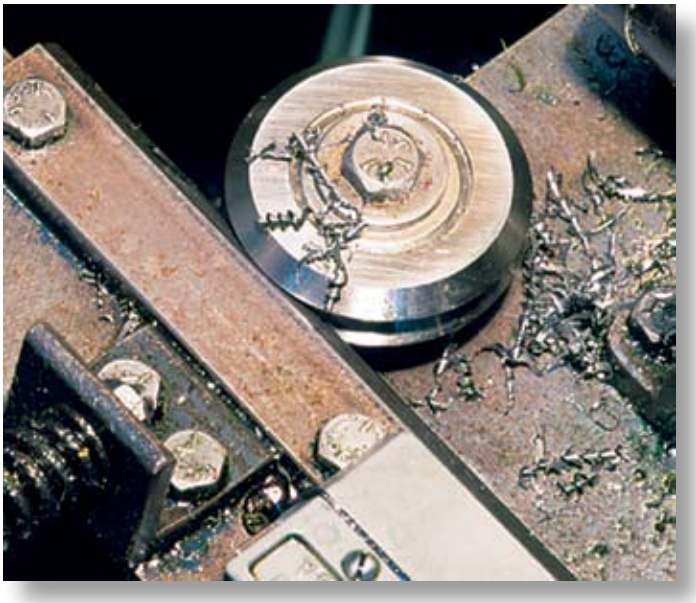

The other main factor affecting wear resistance is lubrication. Wheel covers or lubricators should be designed in whenever possible. Both will distribute a thin coating of oil lubricant along the contact surface of the DualVee® track. The wheel covers offer added protection by preventing debris from entering the wheel/track contact surface. Lubricated and relatively clean wheel/track contact surfaces will ensure maximum service life in a DualVee® linear guide.

As the hardness of the contaminants approaches the hardness of the track and wheels, the wear rate will increase. For these cases, a service factor (see page 27) should be applied to maximum axial and radial working load capacities to provide a longer operating life.

Lubrication

Lubrication is the key to maximizing the life of a DualVee® linear guide. Internally, DualVee® guide wheels are lubricated for life with an extreme pressure, corrosion resistant grease.

The lubrication of the wheel/track interface is the responsibility of the user.

Lubrication of the guide ways will maximize the load capacity of the system and will significantly increase the service life over a non-lubricated configuration under the same loads. A light machine oil or an extreme pressure grease will minimize wear, stick slip, and corrosion on the guide ways in a DualVee® based design.

Lubrication will also increase the maximum linear velocity that a DualVee® bearing arrangement can endure. In applications where high speed or high acceleration rates are present, lubrication of the wheel/track interface is highly recommended. Lastly, lubrication will reduce the overall coefficient of friction of the guide, which, depending on the level of preload, can fall anywhere from 0.008 to 0.015. The availability of lubricators and wheel covers gives design engineers an opportunity to design lubrication right into the DualVee® mechanism with little effort. See specifications on wheel covers and lubricators for more details.

Wheel Carriage Configurations

In designing a wheel carriage, it is important to use the right combination of eccentric and concentric guide wheels depending on the configuration. The linear systems should always have two concentric wheels and all the other guide wheels should be eccentric. The eccentric wheels are used to remove the play between the wheels and track (commonly known as wheel preload) equally loading all the wheels so they roll instead of sliding or skipping on the track due to acceleration. When the wheel carriage is loaded in the radial direction, the concentric wheel should carry the primary load.

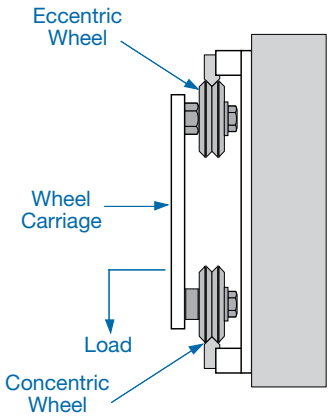

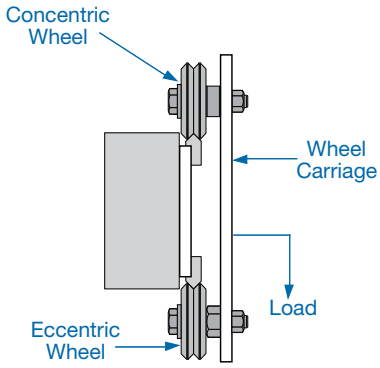

© Bishop-Wisecarver Corporation 2006. All rights reserved www.bwc.com 888.580.8272

It is important to note the location of the eccentric wheel is dependent on whether the track guide way is on the outside or inside of the wheel carriage.

Below are several wheel carriage configurations (examples given for bottom image, opposite page)

Diagram Symbols:

○ = Concentric guide wheel symbol

● = Eccentric guide wheels

▼ = Radial loading directions

3 Wheel Carriage

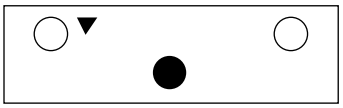

4 Wheel Carriage

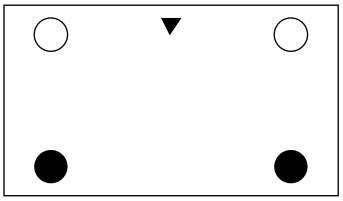

6 Wheel Carriage

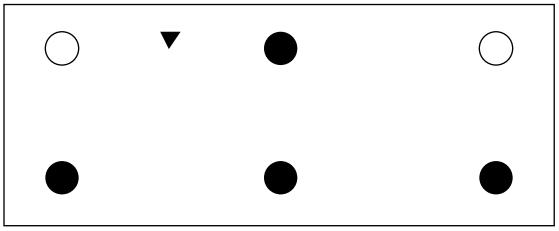

Wheel Preload

Generally wheel preload is used to eliminate play between the wheel and track. Preload equals the radial load when the system is not loaded by another outside force. Preload can be determined by:

Preload =

Breakaway Force/Coefficient of Friction – Applied Load

Caution must be used when applying preload because too much preload on the wheels can cause premature failure. The rated radial value should never be exceeded by the preload and subsequent radial loads applied to the wheel when in service. Note that in a four guide wheel assembly sustaining a load that runs along a long beam, preload on the wheels cannot compensate for deflection of the beam.

Typically in a guide wheel and carriage application, there should be two concentric mounted wheels and the rest of the wheel should be on eccentric mounts. The eccentric type guide wheels are used to create a camming action to preload the guide wheels against one side of the guide track. Caution must be used when applying preload because too much preload on the wheels can cause premature failure.

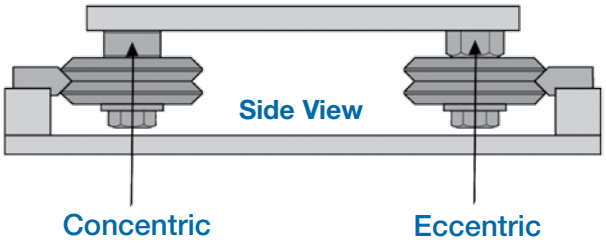

Normal adjustment is obtained by rotating the eccentric bushing until all free play is removed from the carriage assembly. When the eccentrics are adjusted and the carriage plate is held firmly in place, one should be able to rotate by hand any one of the four guide wheels against the its mating track. If rotation is not possible the preload should be reduced accordingly.

© Bishop-Wisecarver Corporation 2006. All rights reserved. www.bwc.com 888.580.8272

TECHNICAL REFERENCE

Wheel Adjustment Wrenches

Part #'s	Wheel Size	A	B	C	D	E
WR0MI	0	5.00	1.25	.435-.440	.377-.382	.0747±.0050
WR1MI	1	7.00	1.50	.474-.479	.439-.444	.0747±.0050
WR2MI	2	8.00	1.75	.553-.558	.565-.570	.1046±.0050
WR3MI	3	9.00	2.00	.750-.755	.752-.757	.1345±.0050
WR4MI	4	9.00	2.00	.868-.873	.877-.882	.1345±.0050

*Values are in inches

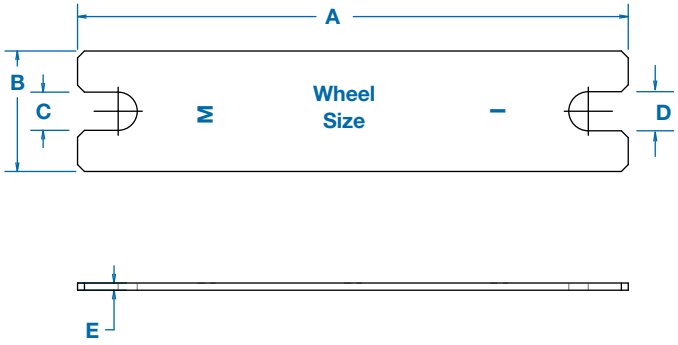

Studded Wheel Mounting

Wheel Size	A	B min	C min	D	E	F
0	.500 ±.005	.305	.097	∨90˚ to ø .255	ø.2215+.0014, -.0000	M6 X 1.0
1	.610 ±.005	.342	.095	∨90˚ to ø .297	ø.2505+.0014, -.0000	M8 X 1.25
2	.750 ±.005	.459	.129	∨90˚ to ø .406	ø.3775+.0014, -.0000	M10 X 1.5
3	.906 ±.005	.615	.205	∨90˚ to ø .505	ø.4244+.0014, -.0000	M12 X 1.75
4	1.100±.005	.846	.271	∨90˚ to ø .533	ø.5025+.0014, -.0000	M14 X 2.0

*Values are in inches

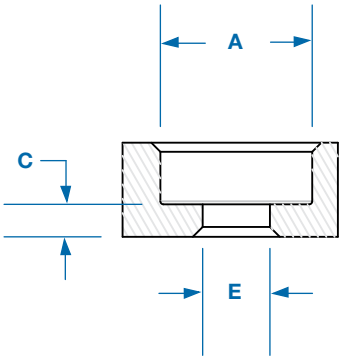

Eccentric Stud Hole Geometry

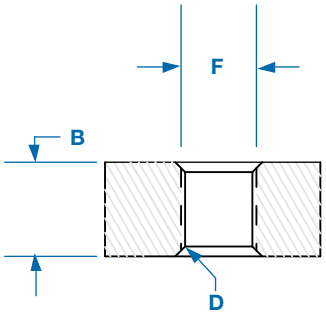

Concentric Stud Hole Geometry

© Bishop-Wisecarver Corporation 2006. All rights reserved www.bwc.com 888.580.8272

APPLICATION DATA SHEET

Company: _____
Contact: _____
Address: _____

City: _____ State: _____ Zip Code: _____
Phone: _____ Fax: _____ e-mail: _____

System Orientation: _____	horizontal		vertical		
Load: _____	lbs		N		
Stroke Length: _____	in		m		
Velocity: _____	in/s		m/s		
Accel/Decel: _____	in/s^2		m/s^2		
Linear Accuracy: _____	in/ft		mm/m		
Repeatability: _____	in		mm		
Duty Cycle: _____	in/day		m/day		
Environment: _____	factory				
Temperature: _____	˚F	food grade	˚C	clean room	other
Additional Forces: _____	lbs		N		

Product/Machine Description: _____

Additional Requirements: _____

Expected Volume: _____ Date Needed: _____

System Sketch

BISHOPWISECARVER®

2104 Martin Way, Pittsburg, CA 94565
phone: 925.439.8272 fax: 925.439.5931
info@bwc.com www.bwc.com

PRODUCTS :

BISHOPWISECARVER®

DualVee®
Guide Wheels

LoPro®
Linear Motion System

UtiliTrak™

QuickTrak®

MinVee™

Bishop-Wisecarver provides a written one year limited warranty assuring the customer that its products conform to published specifications and are free from defects in material or workmanship.

© Bishop-Wisecarver Corporation 2006.
All rights reserved

HepcoMotion®

HDS
Heavy Duty Slide System

PRT
Ring and Track System

HDLS Heavy Duty
Driven Linear System

SL2
Corrosion Resistant System

DLS
Driven Linear System

GV3
Linear Guidance System

DTS
Driven Track System

MCS
Aluminium Profile Sections

Simple-Select®

PDU2

PSD120

PRODUCT ORDERS

Please call Bishop-Wisecarver with your specific length requirements and additional ordering assistance. Our technical staff is available to assist with information specific to your application.

Bishop-Wisecarver Corporation: Exclusive North and Central American Partner and Distributor for HepcoMotion Products since 1984.

888.580.8272 www.bwc.com

BISHOPWISECARVER®

Part # CAT-DV Revised July 2006